MICRO-TEL

MICROWAVE MEASUREMENT
& SURVEILLANCE EQUIPMENT

REF. DESIGN.	DESCRIPTION	MFR.	DRAWING/ PART NO.
A1B1, FRONT PANEL			
A1B1A2-J1	CONNECTOR, 6 Pin	Cinch	50-12A-30
A1B1A1-J1	CONNECTOR, 9 Pin	Cinch	DEM9-S
	CAPACITOR	Erie	8101-100-651-102M
R1,9	RESISTOR, Variable, 1K		RV6NAYSD102A
R2	RESISTOR, Variable, W/SW, 10K	AB	GS1-G04P104UA
R3,6,7	RESISTOR, Variable, 10K		RV6NAYSD103A
R4,5	RESISTOR, Variable, W/SW, 10K	AB	GS10G04-P103UA
R8	RESISTOR, Variable, 10K	CTS	3P2251
R10	RESISTOR, Variable, 100K	AB	GA2G040P104AA
R11	RESISTOR, Variable, 50K	Bourns	3511S-1-503
R12	RESISTOR, Composition, 270K, 5%, 1/4W		RC07Gf273J
R13	RESISTOR, Composition, 300K, 5%, 1/4W		RC07GF303J
R14	RESISTOR, Composition, 20 ohms, 5%, 1/4W		RC07GF221J
R15	RESISTOR, Composition, 1K, 5%, 1/4W		RC07GF102J
R16,17	RESISTOR, Composition, 10K, 5%, 1/4W		RC07GF103J
R18	RESISTOR, Composition, 620 ohms, 5%, 1/4W		RC07GF621J
R19	RESISTOR, Composition, 4.7K, 5%, 1/4W		RC07GF472J

REF. DESIGN.	DESCRIPTION	MFR.	DRAWING/ PART NO.
R20	RESISTOR, Variable, 100 ohms		RV6NAYSD101A
S1,2,8,9	SWITCH, Toggle, DPDT	JBT	JMT223
S3	SWITCH, Rotary, 8P3T	Grayhill	71AD30-02-4-AJN
S5	SWITCH, Rotary, 2P7T	Grayhill	71AD30-02-1-AJN
S6	SWITCH, Rotary, 4P5T	Grayhill	71AD30-02-2AJN
S7	SWITCH, Rotary, 4P5T	Grayhill	71AD30-02-3AJN
Z1	ENCODER, Optical	Vernitech	VOE11-250-AQPU-51L1-1651

A1B1A1, SIGNAL LEVEL/SC FREQUENCY METER

C1,3	CAPACITOR, Tantalum, 22uf, 10%, 15V	Kemet	T310226015AS
C2,4,5,7	CAPACITOR, Ceramic, .1uf, 10%, 50V	Erie	8121-M-50-651-1042
C6	CAPACITOR, .033, 10%, 50V	Erie	8121-100-651-333M
C8	CAPACITOR, Ceramic, .001uf, 1KV	Spa	5GA-D10
C9,10	CAPACITOR, Tantalum, 120uf, 10%, 10V	Kemet	T310127-010AS
D1	DIODE, Current Regulator, .33ma, 10%	Siliconix	CR033
DS-1,2-3	DISPLAY, 7 Segment	Monosanto	MAN 74
Q4	TRANSISTOR, FET	Siliconix	E204
J1	CONNECTOR, 9 Pin	Cinch	DEM-9P
R1,7,8,14	RESISTOR, Variable, 20K	Helipot	62PAR20K
R2	RESISTOR, Variable 30K		RC07GF303J

REF. DESIGN.	DESCRIPTION	MFR.	DRAWING/ PART NO.
R3,10	RESISTOR, Variable, 47K		RC07GF473J
R4,11	RESISTOR, Variable, 4.7K		RC07GF472J
R5	RESISTOR, Variable, 100K		RC07GF104J
R6	RESISTOR, Variable, 10K		RC07GF103J
R9	RESISTOR, Variable, 75K		RC07GF753J
R12,13	RESISTOR, Variable, 27K		RC07GF273J
R15	RESISTOR, Variable, 18K		RC07GF183J
R16	RESISTOR, Variable, 12K		RC07F123J
R17	RESISTOR, Variable, 12 ohms		RC07GF120J
R18	RESISTOR, Variable, 2K	Amphenol	3811P202
R19	RESISTOR, Variable, 5.6K, 5%, 1/4W		RC07GF562J
R20,21,22,23, 24,25,26	RESISTOR, Composition, 150 ohms, 5%, 1/4W		RC07GF151J
R27,28,29,30	RESISTOR, Composition, 5.1K, 5%, 1/4W		RC07GF512J
U1	INTEGRATED CIRCUIT		1458
U2	INTEGRATED CIRCUIT	RCA	CD4052
U3	INTEGRATED CIRCUIT		74C48
U4	INTEGRATED CIRCUIT	Siliconix	LD130

REF. DESIGN.	DESCRIPTION	MFR.	DRAWING/ PART NO.
A1B1A2, TUNING LOGIC ASSEMBLY			
A1B1A2-1, TUNING LOGIC BOARD #1			
C1,2,5,8,11,15	CAPACITOR, Ceramic, .1uf, 50V	Erie	8131-050-651-104M
C4	CAPACITOR, Tantalum, 1uf, 10V	Kemet	T310A105-010AS
C6	CAPACITOR, Ceramic, .01, 50V	Erie	8121-050-651-103M
C12	CAPACITOR, Ceramic, 360pf		DM10-361J
C37	CAPACITOR, Ceramic, .001uf, 50V	Erie	8121-100-X7R0-102K
D1,2,4,5,6	DIODE		IN4148
D3	DIODE		IN270
D7	DIODE		IN4731
R1	RESISTOR, Variable, 1K	Bourns	3299P-1K
R2,9,17,19, 25,26,39	RESISTOR, 100K, 5%, 1/8W		RC05GF104J
R3,6,7	RESISTOR, 5.1K, 5%, 1/8W		RC05GF512J
R4,5,10,11,16, 18,20,22,27	RESISTOR, 10K		RC05GF103J
R8	RESISTOR, 30K, 5%, 1/8W		RC05GF303J
R12	RESISTOR, 20K, 5%, 1/8W		RC05GF203J
R13	RESISTOR, 12K, 5%, 1/8W		RC05GF123J
R13,15	RESISTOR, Composition, 1K, 5%, 1/8W		RC05GF102J

REF. DESIGN.	DESCRIPTION	MFR.	DRAWING/ PART NO.
R21	RESISTOR, Composition, 2.7K, 5%, 1/8W		RC05GF272J
R28,29,30	RESISTOR, Composition, 9.1K, 5%, 1/8W		RC05GF912J
Q1,2,3,4,5, 6,7,8	TRANSISTOR		2N3904
U1,2	INTEGRATED CIRCUIT		1458
U3	INTEGRATED CIRCUIT		LM566CN
A1B1A2-2, TUNING LOGIC BOARD #2			
C9	CAPACITOR, Tantalum, 10uf, 20V	Kemet	T310
C10	CAPACITOR, Ceramic, .1, 50V	Erie	8131-050-651-104M
C13,14	CAPACITOR, Ceramic, .001	Erie	8121-100-X7R0-102K
R23,24	RESISTOR, Composition, 12K, 5%, 1/8W		RC05GF123J
R31 thru 38	RESISTOR, Composition, 10K, 5%, 1/8W		RC05GF103J
Q9,10	TRANSISTOR		2N3904
U4	INTEGRATED CIRCUIT		74LS74
U5,9	INTEGRATED CIRCUIT		74LS00
U6	INTEGRATED CIRCUIT		74LS08
U7	INTEGRATED CIRCUIT		74LS32
U8	INTEGRATED CIRCUIT		74LS21
A1B1A2-3, SWITCH BOARD			
S1,5	SWITCH		MT-C-354-31
S2,6	SWITCH		MT-C-354-32
S3,7	SWITCH		MT-C-354-33
S4,8	SWITCH		MT-C-354-34

REF. DESIGN.	DESCRIPTION	MFR.	DRAWING/ PART NO.
A1B1A3, AUDIO ASSEMBLY			
C1	CAPACITOR, Tantalum, 4.7uf, 15V	Kemet	T310B475015AS
C2,3,9	CAPACITOR, Tantlaum, 22uf, 15V	Kemet	T310B226015AS
C7	CAPACITOR, Tantalum, .001uf, 100V	Sprague	5GAD10
U1	INTEGRATED CIRCUIT		LM380N-8
A1B2, REAR PANEL			
	CONNECTOR		M4P-LSH-10 (male)
A1B3, RECEIVER ENCLOSURE			
A10J1,A6J1	CONNECTOR, 15 Pin	Win	HBD-15SO
A6,2,3	CONNECTOR, 18 Pin	Win	HBD-18SO
A11-J1	CONNECTOR, 10 Pin,	Win	HBD-10SO
Z14	FILTER, 55.7 MHz	K&L	4B51-55-7/3-S
C1,2,3,4,5 6,7	CAPACITOR, Tantalum, 10uf, 20V	Kemet	T310B106-020AS
C18	CAPACITOR, Tantalum, 22uf, 15V	Kemet	T310B226-015AS
R1,2	RESISTOR, Composition, 5.1 ohms, 5%, 1/4W		RC07GF5R1
R3	RESISTOR, Composition, 2.7 ohms, 5%, 1/4W		RC07GF2R7
R4	RESISTOR, Composition, 10 ohms, 5%, 1/4W		RC07GF100

REF. DESIGN.	DESCRIPTION	MFR.	DRAWING/ PART NO.
A1B4, SIDE RAIL ASSEMBLY			
J13	CONNECTOR, 9 Pin		M9S
R1	RESISTOR, Variable, 2.5K, 10%, 1/2W		Rv6NAYSD252A
S1	SWITCH, Toggle	JBT	JMT223
S2	SWITCH, Toggle	Raytheon	MST-305D
A1B6, HARNESS ASSEMBLY			
A2P1	CONNECTOR, 15 Pin Male	Cinch	DBM-25-P
A3P1,A8P3	CONNECTOR, 37 Pin, Female	Cinch	DCM-37-S
A6J4	CONNECTOR, 50 Pin, Female	Cinch	DDM50S
A4B1,B2,B3	CONNECTOR, 15 Pin, Female	Cinch	DAM-15-S
A9P1	CONNECTOR, 9 Pin, Female	Cinch	DEM-9-S
A8B1	CONNECTOR, 25 Pin, Male	Cinch	DCM-37-P
A8B17-P1	CONNECTOR, 15 Pin	Cinch	DAM 15-S
	CONNECTOR, 4 Pin		M4P-LRH10C
	CONNECTOR, 4 Pin		M4S-LSH10C

REF. DESIGN.	DESCRIPTION	MFR.	DRAWING/ PART NO.
A2, POWER SUPPLY			
F1	FUSE, Fast Blow, 250V, 3 Amp		3AG-3
F2	FUSE, Fast Blow, 32V, 10 Amp		3AG-10
FL1	LINE FILTER, AC	Corcom	3EF-1
C25	CAPACITOR, Tantalum, 10uf, 20V	Kemet	T310B106020AS
J1	CONNECTOR, 4 Pin	Bendix	PT02A-8-4P
J2	CONNECTOR, 25 Pin	Cinch	DBM 25S
J3	CONNECTOR, 4 Pin	Win	M4S-LSH10
S1	SWITCH, Slide, DPDT	Switchcraft	46206LFR
S2	SWITCH, Slide, 4PDT	Switchcraft	50212L
S3	SWITCH, Toggle, SPST		JMT-123
T1	TRANSFORMER, Power	BTC	BX-8231
A2B1, CONTROL BOARD			
C1	CAPACITOR, Electrolytic, 210uf, -10/+50, 200V	Mallory	TCG211T200N2C3P
C2	CAPACITOR, Electrolytic, 150uf, -10/+50, 35V	C-D	WBR-150-35
C3	CAPACITOR, Tantalum, 10uf, 35V	Kemet	T310C106K035AS
C$	CAPACITOR, Film, 3300pf, 10%, 80V	Spr	192P3329R8
C5	CAPACITOR, Ceramic, 0.1uf, 20%, 100V	Erie	8131-100-651-104M
C6,7	CAPACITOR, Tantalum, 2.2uf, 10%, 20V	Kemet	T310B225K020AS
C27	CAPACITOR, Tantalum, 6.8uf, 6V	Kemet	T310A685K006AS

REF. DESIGN.	DESCRIPTION	MFR.	DRAWING/ PART NO.
D1,2,3,4,6,7, 8,9,10,11,12	DIODE, Silicon	GE	IN4148
D5	DIODE, Silicon	Mot	IN4001
D22	DIODE, Zener		IN5245
DA1	DIODE ASSEMBLY, FWB, 1.5A, 400V	Mot	MDA942A-5
DA2	DIODE ASSEMBLY, FWB 1.5A, 100V	Mot	MDA942-2
Q1,2,3,4,5	TRANSISTOR, PNP	Mot	2N2905A
Q6	TRANSISTOR, NPN	Mot	2N3904
Q8,10	TRANSISTOR, NPN	Mot	2N2222
R1	THERMISTOR, 5 ohms	Rodan	SG-4
R2	RESISTOR, Composition, 100K, 5%, 1/2W		RC20GF104J
R3,62	RESISTOR, Composition, 4.7K, 5%, 1/4W		RC07GF472J
R4	RESISTOR, Film, 8.25K, 5%, 1/4W		RN55D8251F
R5,12,13	RESISTOR, Composition, 47K, 5%, 1/4W		RC07Gf473J
R6,7	RESISTOR, Composition, 6.8K, 5%, 1/4W		RC07GF682J
R8,9	RESISTOR, Composition, 2.2K, 5%, 1/4W		RC07GF222J
R10,11	RESISTOR, Composition, 2.7K, 5%, 1/4W		RC07GF272J
R14	RESISTOR, Film, 10K, 1%, 1/4W		RN55D1002F
R15	RESISTOR, Variable, 10K, 10%, 1/2W	Beckman	62PAR10K

REF. DESIGN.	DESCRIPTION	MFR.	DRAWING/ PART NO.
R16,18,20	RESISTOR, Composition, 10K, 5%, 1/4W		RC07GF103J
R17	RESISTOR, Composition, 33K, 5%, 1/4W		RC07GF333J
R19	RESISTOR, Composition, 200K, 5%, 1/4W		RC07GF204J
R21	RESISTOR, Film, 4.32K, 1%, 1/4W		RN55D4321F
R22	RESISTOR, Variable, 2K, 10%, 1/2W	Beckman	62PAR2K
R23	RESISTOR, Film, 1650 ohms, 1%, 1/4W		RN55D1651F
R24,25,26,27	RESISTOR, Composition, 56 ohms, 5%, 1/4W		RC07GF560J
R63	THERMISTOR	GE	V150LA10A
U1	INTEGRATED CIRCUIT, Reg. Cont.	Mot	MC3420P
U2	INTEGRATED CIRCUIT, Amplifier	Mot	MC3403P

A2B2, RECTIFIER BOARD

C9	CAPACITOR, Electrolytic, 400uf, -10/+75, 12V	C-D	NLW-400-12
C11,13	CAPACITOR, Electrolytic, 100uf, -10/+75, 50V	C-D	NLW-100-50
DA3	DIODE ASSEMBLY, FWB, 5A	Vero	VH248-X
R30	RESISTOR, Composition, 82 ohms, 5%, 1/4W		RC07GF820J
R31	RESISTOR, Composition, 180 ohms, 5%, 1/4W		RC07GF181J

REF. DESIGN.	DESCRIPTION	MFR.	DRAWING/ PART NO.
R32	RESISTOR, Composition, 4.7 ohms		RC07GF4R7J
Q13	transistor		2N2905A

A2B3, VOLTAGE REGULATOR

C10	CAPACITOR, Tantalum, 2.2uf, 10%, 35V	Kemet	T310B225K034AS
C12	CAPACITOR, Ceramic, .33uf, 50V	Spr	2CZ5U334D8500C4
C14,16,18,21, 22	CAPACITOR, Tantalum, 10uf, 10%, 35V	Kemet	T310C106K035A6
C15,17,19	CAPACITOR, Ceramic, 0.1uf, 100V	Erie	8131-100-651-104M
C20,23,24	CAPACITOR, Tantalum, 10uf, 10%, 20V	Kemet	T310B106K020AS
D19	DIODE, Silicon	Mot	IN4007
D21	DIODE, Zener, 36V, 5W	Mot	IN5365
R33,45	RESISTOR, Film, 8.87K, 1%, 1/4W		RN55D8871F
R34,37,43,46	RESISTOR, Variable, 2K, 1%, 1/4W	Beckman	62PAr2K
R35,38,41	RESISTOR, Film, 5.11K, 1%, 1/4W		RN55D5111F
R36	RESISTOR, Film, 5.90K, 1%, 1/4W		RN55D5901F
R39	RESISTOR, Film, 649 ohms, 1%, 1/4W		RN55D6490F
R40	RESISTOR, Variable, 500 ohms, 10%, 1/2W	Beckman	62PAR500
R42	RESISTOR, Film, 11.8K, 1%, 1/4W		RN55D1182F

REF. DESIGN.	DESCRIPTION	MFR.	DRAWING/ PART NO.
R44,47,50,51, 53	RESISTOR, Film, 2.21K, 1%, 1/4W		RN55D2211F
R48	RESISTOR, Film, 3.32K, 1%, 1/4W		RN55D3321F
R49,52	RESISTOR, Variable, 1K, 10%, 1/2W	Beckman	62PAR1K
R62	RESISTOR, Film, 200 ohms, 5%, 1/4W		RC07GF201J
U3	INTEGRATED CIRCUIT, Regulator	Fairchild	UA79M20AHC
U4,5,6	INTEGRATED CIRCUIT, Regulator	Fairchild	UA78GUIC
U7,8,9,10	INTEGRATED CIRCUIT, Regulator	Fairchild	UA79GUIC

A2B4, SWITCHING CHASSIS

C8	CAPACITOR, Electrolytic, 150uf, 35V	C-D	WBR-150-35
D13,14	DIODE	Mot	IN4936
D15,16	DIODE	Mot	IN4935
D17,18,20	DIODE	Jan	IN5816
D20	DIODE	Varo	USK 1540
Q7,9	TRANSISTOR	Delco	DTS-723
Q11,12	TRANSISTOR	Mot	MJ802
R28,29	RESISTOR, Composition, 3.6 ohms, 5%, 1/4W		RC07GF3R6J
T3	TRANSFORMER, Power	MT	81B-20-328

REF. DESIGN.	DESCRIPTION	MFR.	DRAWING/ PART NO.
A2B5, BATTERY CUT OUT			
C26	CAPACITOR, Tantalum, 2.2uf, 10V	Kemet	T310A225-010AS
Q14	TRANSISTOR		2N3904
R54	RESISTOR, Composition, 15K, 5%, 1/4W		RC07GF1532J
R55,57	RESISTOR, Variable, 10K, 10%, 1/2W	Beckman	62PAR10K
R56	RESISTOR, Composition, 5.1K, 5%, 1/4W		RC07GF512J
R58	RESISTOR, Composition, 4.7K, 5%, 1/4W		RC07GF472J
R59	RESISTOR, Composition, 120K, 5%, 1/4W		RC07GF124J
R60,61	RESISTOR, Composition, 100K, 5%, 1/4W		RC07GF104J
U11	INTEGRATED CIRCUIT, Voltage Regulator		78L06
U12	INTEGRATED CIRCUIT		MC3403

REF. DESIGN.	DESCRIPTION	MFR.	DRAWING/ PART NO.
A3B1, AUDIO/VIDEO IF			
C154	CAPACITOR, Mica, 82pf, 5%, 50V	Elm	DM5Y820-J
C202,204,205, 206,207	CAPACITOR, Ceramic, .001uf	Spr	5GA-D10
C203	CAPACITOR, Ceramic, .1	Erie	8131-100-651-104
FL 1 thru 37	FILTER, Feed Trhu	Erie	1203-050
J1	CONNECTOR, 37 Pin, Male	Cinch	DCM-37P
J2,3,5,8	CONNECTOR, Right Angle, Male	AEP	112
J6,7	CONNECTOR, Male	AEP	UG1619/U
R5,10,29,36, 43,59,91	RESISTOR, Composition, 2.7 ohms, 5%, 1/4W		RC07GF2R7J
R10,164,167	RESISTOR, Composition, 10 ohms, 5%, 1/4W		RC07Gf100J
R21,223	RESISTOR, Composition, 51 ohms, 5%, 1/4W		RC07GF510J
R169	RESISTOR, Composition, 12 ohms, 5%, 1/4W		RC07GF120J
R174,176	RESISTOR, Composition, 56 ohms, 5%, 1/4W		RC07GF560J
R207	RESISTOR, Composition, 10K, 5%, 1/4W		RC07GF103J
R215	RESISTOR, Composition, 47K, 5%, 1/4W		RC07GF473J
R216	RESISTOR, Composition, 470K, 5%, 1/4W		RC07GF474J
R220	RESISTOR, Composition, 91K, 5%, 1/4W		REC07GF913J
R221	RESISTOR, Composition, 75K, 5%, 1/4W		RC07GF753J

REF. DESIGN.	DESCRIPTION	MFR.	DRAWING/ PART NO.
R222	RESISTOR, Composition, 150K, 5%, 1/4W		RC07GF154J
D35,36,37	DIODE, Silicon		IN4148

A3B1A1, 45/10.7 CONVERTER

C1	CAPACITOR, Ceramic Disc, .001uf	Spr	5GA-D10
C2	CAPACITOR, Mica, 220pf	Elm	DM15-221J
C5	CAPACITOR, Ceramic, .01	Spr	TG-510
D1	DIODE, Silicon		IN4148
FL1	FILTER, Feed Thru	Erie	1203-050
L1	INDUCTOR, Fixed, 6.8uh	Delevan	1025-40
Q1	TRANSISTOR, Silicon, NPN	TI	2N5109
R1	RESISTOR, Composition, 150 ohms, 5%, 1/4W		RC07GF151J
R2	RESISTOR, Composition, 6.8K, 5%, 1/4W		RC07GF682J
R3	RESISTOR, Composition, 200 ohms, 5%, 1/4W		RC07GF201J
R4	RESISTOR, Composition, 27 ohms, 5%, 1/4W		RC07GF270J
T1	TRANSFORMER, 600 ohms, Mixer/IP	MT	M81B-30302-5
T2	TRANSFORMER, Mixer, LO	MT	M81B-30-02-3
T3	TRANSFORMER, Mixer O/P	MT	M81B-30-302-6
U1	INTEGRATED CIRCUIT, Mixer	Siliconix	U350

REF. DESIGN.	DESCRIPTION	MFR.	DRAWING/ PART NO.
A3B1A2, 2 MHz IF			
C3,,9,12,13, 14,22,24,26	CAPACITOR, Ceramic, .01uf	Spr	TG-510
C4,21,25	CAPACITOR, Ceramic, .1uf, 100V	Erie	8131-100-651-104M
C5	CAPACITOR, Mica, 33pf		DM-15-330J
C6	CAPACITOR, Mica,. 27pf, 300V		DM15-270J
C7,23	CAPACITOR, Mica, 100pf		DM15-101J
C10	CAPACITOR, Tantalum 15uf, 10%, 16V	Kemet	T390C156K016AS
C11	CAPACITOR, Mica, 180pf		DM15-181J
C16	CAPACITOR, Ceramic, .001uf, 100V	Spr	5GA-D10
C18,20	CAPACITOR, Tantalum, 33uf, 10%, 10V	Kemet	T390D336K010AS
C19	CAPACITOR, Tantalum, 2.2uf, 10%, 16V	Kemet	T390A225K016AS
C27	CAPACITOR, Variable, 3.5-20pf	Erie	518-000A-3.5-20
C30,35	CAPACITOR, Mica, 62pf		DM15-620J
C45	CAPACITOR, Mica 220pf		DM15-221J
D2,3,4	DIODE, Silicon		IN4148
FL2,3,4,5,6,31	FILTER, Feed Thur	Erie	1203-050
L3	INDUCTOR, Variable, 10uh	Cambion	558-7107-25

REF. DESIGN.	DESCRIPTION	MFR.	DRAWING/ PART NO.
L4	INDUCTOR, Fixed, 27uh	Delevan	1025-54
L5,6	INDUCTOR, Variable, 2.2uh	Cambion	558-71-7-18
Q2	TRANSISTOR, Dual Gate FET	Signetics	SD306
R6,8	RESISTOR, Composition, 47 ohms, 5%, 1/4W		RC07GF470J
R7	RESISTOR, Composition, 22K, 5%, 1/4W		RC07GF223J
R8	RESISTOR, Variable, 100K	Helipot	62PR100K
R11,17,23,24	RESISTOR, Composition, 1K, 5%, 1/4W		RC07GF102J
R12	RESISTOR, Compostion, 150K, 5%, 1/4W		RC07GF154J
R13	RESISTOR, Composition, 51 ohms, 5%, 1/4W		RC07GF510J
R14	RESISTOR, Composition, 2K, 5%, 1/4W		RC07GF202J
R15	RESISTOR, Composition, 43K, 5%, 1/4W		RC07GF433j
R16	RESISTOR, Variable, 10K	Helipot	62PR10K
R18	RESISTOR, Variable, 5K	Helipot	62PR5K
R19	RESISTOR, Composition, 6.2K, 5%, 1/4W		RC07GF622J
R21	RESISTOR, Composition, 33K, 5%, 1/4W		RC07GF333J
R22	RESISTOR, Composition, 10 ohms, 5%, 1/4W		RC07GF100J
R25	RESISTOR, Composition, 10K, 5%, 1/4W		RC07GF103J

REF. DESIGN.	DESCRIPTION	MFR.	DRAWING/ PART NO.
R35	RESISTOR, Composition, 4.7K, 5%, 1/4W		RC07GF472J
U2	INTEGRATED CIRCUIT, IF Amp	Fairchild	UA757
U3	INTEGRATED CIRCUIT, Detector	Plessey	SL623
U4	INTEGRATED CIRCUIT Regulator	Fairchild	78L06
U6	INTEGRATED CIRCUIT FM Limiter	RCA	CA3089E

A3B1A3, 15 kHz AUDIO IF

C60,83,84,88	CAPACITOR, Ceramic, .001uf	Spr	5GAD10
C63,64,66,74, 76,77,78,79, 85,	CAPACITOR, Ceramic, .01	Spr	TG-D10
C67	CAPACITOR, Variable, 3.5 to 20pf		518-000A-3.5-20
C68,71	CAPACITOR, Variable, 2.5-9pf	Erie	518-000A 2.5-9
C72,80,91,93	CAPACITOR, Ceramic, .1uf, 100V	Erie	8131-100-651-104M
C73	CAPACITOR, Mica, 47pf	Elmen	DM15-470J
C81,92	CAPACITOR, Ceramic, .005, 100V	Spr	TG-D50
C82,89	CAPACITOR, Mica, 100pf		DM15-101J
C86,96A,96B, 97A,97B	CAPACITOR, Tantalum, 56uf, 10%, 6V	Kemet	T390D566K006AS
C87	CAPACITOR, Tantalum, 2.2uf, 10%, 16V	Kemet	T390A225K016AS

REF. DESIGN.	DESCRIPTION	MFR.	DRAWING/ PART NO.
C94	CAPACITOR, Tantalum, 4.7uf, 10%, 16V		T390B475K016AS
C98	CAPACITOR, Tantalum, 47uf, 10%, 6V		T390D476K006AS
D8	DIODE, Silicon		1N4148
FL13,14,16, 22,25	FILTER, Feed Thru	Erie	1203-050
L14	INDUCTOR, Wideband Choke		VK20010/3B
L18	INDUCTOR, Fixed, 2.2uh	Delevan	1537-20
Q6	TRANSISTOR, Dual GATE FET	Signetics	SD306
Q7	TRANSISTOR, FET	Signetics	SD201
Q8	TRANSISTOR, FET	Signetics	SD211
R51	RESISTOR, Composition, 22K, 5%, 1/4W		RC07GF223J
R52	RESISTOR, Variable, 100K	Helipot	62PR100K
R53	RESISTOR, Composition, 150K, 5%, 1/4W		RC07GF154J
R54,55,63	RESISTOR, Composition, 10K, 5%, 1/4W		RC07GF103J
R56	RESISTOR, Composition, 43K, 5%, 1/4W		RC07GF433J
R57	RESISTOR, Composition, 47 ohms, 5%, 1/4W		RC07GF470J
R58	RESISTOR, Composition, 12 ohms, 5%, 1/4W		RC07GF120J
R61,66	RESISTOR, Composition, 1K, 5%, 1/4W		RC07GF102J
R62,72	RESISTOR, Composition, 100K, 5%, 1/4W		RC07GF104J

REF. DESIGN.	DESCRIPTION	MFR.	DRAWING/ PART NO.
R64	RESISTOR, Composition, 33K, 5%, 1/4W		RC07GF333J
R67	RESISTOR, Composition, 2.7 ohms, 5%, 1/4W		RC07GF271J
R68	RESISTOR, Composition, 51 ohms, 5%, 1/4W		RC07GF510J
R69	RESISTOR, Variable, 10K, 5%, 1/4W	Beckman	62PR10K
R71	RESISTOR, Variable, 5K, 5%, 1/4W	Beckman	62PR5K
R85	RESISTOR,		
U12	INTEGRATED CIRCUIT IF AMP	Fairchild	UA757
U12	INTEGRATED CIRCUIT Regulator	Fairchild	78L06
U14	INTEGRATED CIRCUIT Detector	Plessey	SL623
U16	INTEGRATED CIRCUIT Detector	Plessey	SL621
Z3	FILTER, Xtal, 10.7 MHz, 15 kHz	Piezo	SXF-001

A3B1A4, 3 kHz AUDIO IF

C75	CAPACITOR, Mica, 12pf	Elmem	DM15-120J
C99,101,102, 103,114,116, 117,118,121, 125,180,185, 190	CAPACITOR, Ceramic, 0.01uf, 100V	Spr	TG-510
C111,181,183, 186,188,191, 194	CAPACITOR, Ceramic, .1uf, 100V	Erie	8131-100-651-104M

REF. DESIGN.	DESCRIPTION	MFR.	DRAWING/ PART NO.
C113	CAPACITOR, Mica, 100pf	Elmem	DM15-101J
C119	CAPACITOR, Ger. Disc, .001uf, 100V	Spr	5GA-D10
C122	CAPACITOR, Mica, 75pf	Elmem	DM15-750J
C123	CAPACITOR, Ceramic, 1.8pf	Stk-Pole	C80-51
C182,184,187, 189,192,193	CAPACITOR, Ceramic,		DM5-070
D9,11,12	DIODE, Silicon		IN4148
FL17,19,21,23	FILTER, Feed Thru	Erie	1203-050
L19,20	INDUCTOR, Fixed, 10uh	Delevan	1925-44
L21	INDUCTOR, Wide Band Choke	Fer/Cube	VK20010/3B
L24	INDUCTOR, Variable, 2.2uh	Cambion	558-7107-18
L26	INDUCTOR, Fixed, 18uh	Delevan	15378-42
Q9	TRANSISTOR, FET	Signetics	SD306
Q20,21,22,23, 24,25	TRANSISTOR, FET	Signetics	SD201
R73	RESISTOR, Composition, 22K, 5%, 1/4W		RC07GF223J
R74	RESISTOR, Variable, 100K	Helipot	62PR100K
R76	RESISTOR, Composition, 150K, 5%, 1/4W		RC07GF154J
R77	RESISTOR, Composition, 43k, 5%, 1/4W		RC07GF433J
R78	RESISTOR, Composition, 10K, 5%, 1/4W		RC07GF103J
R79	RESISTOR, Composition, 47 ohms, 5%, 1/4W		RC07GF470J

REF. DESIGN.	DESCRIPTION	MFR.	DRAWING/ PART NO.
R81	RESISTOR, Composition, 12 ohms, 5%, 1/4W		RC07GF120J
R88	RESISTOR, Composition, 1K, 5%, 1/4W		RC07GF102J
R89,92	RESISTOR, Composition, 2.7 ohms, 5%, 1/4W		RC07GF027J
R93,98	RESISTOR, Composition, 2.2K, 5%, 1/4W		RC07GF222J
R94	RESISTOR, Composition, 3.9K, 5%, 1/4W		RC07GF392J
R96	RESISTOR, Composition, 6.2K, 5%, 1/4W		RC07GF622J
R97,181,186,191	RESISTOR, Composition, 33K, 5%, 1/4W		RC07GF333J
R180,185,190,	RESISTOR, Composition, 100K, 5%, 1/4W		RC07GF104J
R182,183,187, 189,192,194	RESISTOR, Composition, 33K, 5%, 1/4W		RC07GF333J
R184,188,193	RESISTOR, Composition, 4.7K, 5%, 1/4W		RC07GF472J
U17	INTEGRATED CIRCUIT, FM Limiter	RCA	CA3089E
Z5	DISCRIMINATOR, 10.7 MHz 10.7 MHz	Peizo	2283F
Z10	FILTER, XTAL, 10.7 MHz CW, 3 kHz BW	Piezo	SXF-002
Z11	FILTER, XTAL, 10.7 MHz, USB	Piezo	SXF-003
Z12	FILTER, XTAL, 10.7 MHz, LSB	Piezo	SXF-004

REF. DESIGN.	DESCRIPTION	MFR.	DRAWING/ PART NO.
A3B1A5, 150 kHz AUDIO IF			
C20,29,39,41, 42,43,44,47, 54,59,61	CAPACITOR, Ceramic, .01uf, 100V	Spr	TG-510
C31,34,38,55 56	CAPACITOR, Ceramic, .1uf, 100V	Erie	8131-100-651-104M
C32	CAPACITOR, Mica, 47pf	Elmen	DM15-470J
C33,36,51	CAPACITOR, Ceramic, .001uf, 100V	Spr	5GA-D10
C37,46	CAPACITOR, Mica, 180pf		DM15-181J
C48	CAPACITOR, Mica, 91pf		DM15-910J
C49	CAPACITOR, Mica, 220pf		DM15-221J
C52	CAPACITOR, Tantalum, 56uf, 10%, 6V	Kemet	T390D566K006AS
C53	CAPACITOR, Tantalum, 2.2uf, 10%, 16V	Kemet	T390A225K016AS
C57	CAPACITOR, Mica, 47pf		DM15-470J
C58	CAPACITOR, Ceramic, 27pf		DM15-2705
C60	CAPACITOR, Mica, 10pf		DM15-100J
C62	CAPACITOR, Mica, 300pf		DM15-301J
D6,7	DIODE		IN4148
FL7,8,9,11, 12,50	FILTER, Feedthru	Erie	1203-050

REF. DESIGN.	DESCRIPTION	MFR.	DRAWING/ PART NO.
L9	INDUCTOR	Fer/Cube	VK20010/3B
L11	INDUCTOR, Fixed, 2.2uh	Delevan	1537-20
L12	INDUCTOR, Variable, 2.2uh	Cambion	558-7107-18
Q3	TRANSISTOR, FET	Signetics	SD306
Q4	TRANSISTOR, FET	Signetics	SD201
R26	RESISTOR, Composition, 22K, 5%, /4W		RC07GF223J
R27	RESISTOR, Variable, 100K, 5%, 1/4W	Helipot	62PR100K
R28	RESISTOR, Composition, 12 ohms, 5%, 1/4W		RC07GF120J
R31	RESISTOR, Composition, 47 ohms, 5%, 1/4W		RC07GF470J
R32	RESISTOR, Composition, 470 ohms, 5%, 1/4W		RC07GF471J
R33	RESISTOR, Composition, 56K, 5%, 1/4W		RC07GF563J
R34	RESISTOR, Composition, 27 ohms, 5%, 1/4W		RC07GF270J
R35,45	RESISTOR, Composition, 150K, 5%, 1/4W		RC07GF154J
R37,49	RESISTOR, Composition, 1K, 5%, 1/4W		RC07GF102JK
R38,48	RESISTOR, Composition, 2.7 ohms, 5%, 1/4W		RC07GF027J
R39	RESISTOR, Composition, 51 ohms, 5%, 1/4W		RC07GF510J
R41	RESISTOR, Composition, 2K, 5%, 1/4W		RC07GF202J
R42	RESISTOR, Variable, 10K	Beckman	62PR10K

REF. DESIGN.	DESCRIPTION	MFR.	DRAWING/ PART NO.
R44	RESISTOR, Variable, 5K	Beckman	62PR5K
R46	RESISTOR, Composition, 7.5K, 5%, 1/4W		RC07GF752J
R47	RESISTOR, Composition, 33K, 5%, 1/4W		RC07GF333J
R50	RESISTOR, Composition, 3.9K, 5%, 1/4W		RC07GF392J
R55	RESISTOR, Composition, 10K, 5%, 1/4W		RC07GF103J
R65	RESISTOR, Composition, 43K, 5%, 1/4W		RC07GF433J
R215	RESISTOR, Composition, 47K, 5%, 1/4W		RC07GF472J
R216	RESISTOR, Composition, 470K, 5%, 1/4W		RC07GF473J
T1,2	TRANSFORMER		MCLT9-1
U7	INTEGRATED CIRCUIT	Fairchild	UA757
U8	INTEGRATED CIRCUIT	Fairchild	78L06
U9	INTEGRATED CIRCUIT	Plessey	SL623
U11	INTEGRATED CIRCUIT	RCA	CA3089E
Z1,2	FILTER, Ceramic, 10.7 MHz, 4 Pole	Mu Rata	SFE10.7 MS3-Z-A

A3B1A6, AUDIO POWER SWITCHING

C124,126	CAPACITOR, Tantalum, 15uf, 10%, 16V	Kemet	T390C156K016AS
C127,129,131, 132,133,134, 136,144	CAPACITOR, Tantalum, 22uf, 10%, 16V	Kemet	T390D226K016AS
C128	CAPACITOR, Tantalum, 56uf, 10%, 6V	Kemet	T390D566K006AS

REF. DESIGN.	DESCRIPTION	MFR.	DRAWING/ PART NO.
C135	CAPACITOR, Mica, 500pf	Elm	DM15-501J
C137,138,139	CAPACITOR, Ceramic, .1uf, 100V	Erie	8131-100-651-104M
D13,14,16	DIODE, Germanium		IN270
D17,18,19	DIODE, Silicon		IN4148
FL5	FILTER, Feedthru	Erie	1203-050
Q12,13,14,16,17	TRANSISTOR, NPN	Mot	2N3906
R99,102,137, 138,141,142	RESISTOR, Composition, 47K, 5%, 1/4W		RC07GF473J
R101	RESISTOR, Composition, 22K, 5%, 1/4W		RC07GF223J
R103	RESISTOR, Composition, 150K, 5%, 1/4W		RC07GF154J
R104	RESISTOR, Composition, 75K, 5%, 1/4W		RC07GF753J
R106	RESISTOR, Variable, 25K, 5%, 1/4W	Beckman	62PR25K
R107	RESISTOR, Composition, 24K, 5%, 1/4W		RC07GF243J
R108,111,112, 113,114,116	RESISTOR, Composition, 10K, 5%, 1/4W		RC07GF103J
R117,143,144, 145	RESISTOR, Composition,		
R109,122	RESISTOR, Composition 20K, 5%, 1/4W		RC07GF203J
R118,119,121	RESISTOR, Composition, 2K, 5%, 1/4W		RC07GF202J
R123	RESISTOR, Composition, 3.9K, 5%, 1/4W		RC07GF392J
R124	RESISTOR, Variable, 1K	Beckman	62PR1K

REF. DESIGN.	DESCRIPTION	MFR.	DRAWING/ PART NO.
R126,127	RESISTOR, Composition, 2.7 ohms, 5%, 1/4W		RC07GF2R7
R128	RESISTOR, Composition, 39K, 5%, 1/4W		RC07GF393J
R129	RESISTOR, Composition, 120K, 5%, 1/4W		RC07GF124J
R131,132,133, 134,136	RESISTOR, Composition, 5.6K, 5%, 1/4W		RC07GF562J
R135	RESISTOR, Composition, 30K, 5%, 1/4W		RC07GF303J
R146,147,151, 152,153,354	RESISTOR, Composition, 100K, 5%, 1/4W		RC07GF104J
R177	RESISTOR, Composition, 6./8K, 5%, 1/4W		RC07GF682J
R178	RESISTOR, Composition, 3.3K, 5%, 1/4W		RC07GF332J
U18,27	INTEGRATED CIRCUIT, FET SW	RCA	CD4053BE
U19	INTEGRATED CIRCUIT, Dual OP AMP		1458
U22,23	INTEGRATED CIRCUIT, OP AMP	National	LF356N
U24	INTEGRATED CIRCUIT, OP AMP		HD4066
U36	INTEGRATED CIRCUIT, Reg. 3 Pin	Fairchild	78L06

REF. DESIGN.	DESCRIPTION	MFR.	DRAWING/ PART NO.
A3B1A7, 200/10 kHz VIDEO IF			
C150,161,162, 163,170,179, 181,182,203, 295	CAPACITOR, Ceramic, .01uf, 20%, 50V	Erie	8121-050-651-103M
C151,158,195, 281,283	CAPACITOR, Ceramic, .1uf, 50V	Erie	8121-050-651-104M
C152	CAPACITOR, Ceramic, .001uf, 10%, 100V	Sprague	5GA-D10
C153,157,164, 166,167,168, 169,171,172, 173,174,176, 177	CAPACITOR, Mica, 180pf, 5%, 50V	Elmenco	DM-5FY-181-J
C154	CAPACITOR, Ceramic, 82pf		DM5-820J
C156,293	CAPACITOR, Variable, 3.5-20pf	Erie	518-000A3.5-20
C159	CAPACITOR, Mica, 10pf, 55, 50V	Elmenco	DM-5FY-100J
C178	CAPACITOR, Tantalum, 56uf, 10%, 6V	Kemet	T390D0566K006AS
C280	CAPACITOR, Tantalum, .01uf	Erie	8121-050-651-103M
C301,304,307	CAPACITOR, Tantlaum, 27pf		DM5-270J
D5,10	DIODE, Silicon		1N4148
D22,23,24,26, 27,28,29,31	DIODE, Germanium		1N270
FL23,24,26,27, 28,29,43,44,46	FILTER, Feedthru	Erie	1203-050
L29	INDUCTOR		8 Turns/Tap 3-#22
L30	INDUCTOR, 47uh	Delevan	1537

REF. DESIGN.	DESCRIPTION	MFR.	DRAWING/ PART NO.
L31,201	INDUCTOR	Fer/Cube	VK20010-3B
L200	INDUCTOR, 5.2uh		T25-2-39
L210	INDUCTOR, 15uh	Delevan	1025-15uh
L301	INDUCTOR, 4.7uh		T25-2-37
L307	INDUCTOR, 100uh	Delevan	1025-100uh
Q18,19,20, 100,101	TRANSISTOR	SIGNETICS	SD201
R150,161,163, 165,195,196	RESISTOR, Composition, 150K, 5%, 1/4W		RC07GF154J
R155,160,179, 181,182,197	RESISTOR, Composition, 10 ohms, 5%, 1/4W		RC07GF100J
R162	RESISTOR, Composition, 1.5K, 5%, 1/4W		RC07GF152J
R166,172	RESISTOR, Composition, 100 ohms, 5%, 1/4W		RC07GF101J
R168,171,282, 283,300	RESISTOR, Composition, 1.2K, 5%, 1/4W		RC07GF122J
R173,202,203	RESISTOR, Composition, 47K, 5%, 1/4W		RC07GF473J
R174	RESISTOR, Composition, 56 ohms, 5%, 1/4W		RC07GF560J
R199,200	RESISTOR, Composition, 1K, 5%, 1/4W		RC07GF102J
R201,206,208, 209	RESISTOR, Composition, 10K, 5%, 1/4W		RC07GF103J
R204	RESISTOR, Composition, 1K, 5%, 1/4W		RC07GF272J
R205	RESISTOR, Composition, 4.7K, 5%, 1/4W		RC07GF472J
R280	RESISTOR, Composition, 100K, 5%, 1/4W		RC07GF104J

REF. DESIGN.	DESCRIPTION	MFR.	DRAWING/ PART NO.
R281	RESISTOR, Composition, 68K, 5%, 1/4W		RC07GF683J
R284	RESISTOR, Composition, 2K, 5%, 1/4W		RC07GF202J
U28,32	INTEGRATED CIRCUIT	Plessey	SL612
U29	INTEGRATED CIRCUIT	Plessey	SL611
U31	INTEGRATED CIRCUIT	Fairchild	UA753
U33	INTEGRATED CIRCUIT	TI	SN76502
U34	INTEGRATED CIRCUIT	RCA	CD4053BE
U35	INTEGRATED CIRCUIT		LM1458
Z7,8	FILTER, Ceramic, 10.7 MHz		SFE-10.7
Z13	FILTER, XTAL, 13.5 MHz/10 kHz	Piezo	SXF5354-005

A3B2, 45 MHz MARKER GENERATOR

C1,7	CAPACITOR, Ceramic, .005pf, 20%, 100V	Sprague	TG-D50
C2	CAPACITOR, Mica, 20pf, 5%		DM15-200J
C3	CAPACITOR, Mica, 100pf, 5%		DM15-101J
C4	CAPACITOR, Ceramic, 1pf	Stackpole	C80-51
C5,11	CAPACITOR, Ceramic, .1uf	Erie	8121-050-651-104M
C6,8,9,10	CAPACITOR, Mica, 1000pf, 5%		DM15-102J
D1	DIODE, Zener, 5.1V		IN5231
D2,3,4	DIODE, Attenuator	HP	5082-3077

REF. DESIGN.	DESCRIPTION	MFR.	DRAWING/ PART NO.
FL1-3	CAPACITOR, Feedthru	Amp	859640
FL-2	CAPACITOR, Feedthru	Erie	1203-050
J1	CONNECTOR		UG1619/U
L1	INDUCTOR, Variable, .47uh	Cambion	558-7107-09
L2	INDUCTOR, Fixed, Molded, 4.7uh	Delevan	1025-36
L3	INDUCTOR, Fixed, Molded, 47uh	Delevan	1025-60
Q1	TRANSISTOR		MPS 918
R1	RESISTOR, Composition, 24K, 5%, 1/4W		RC07GF243J
R2	RESISTOR, Composition, 4.3K, 5%, 1/4W		RC07GF432J
R3,13	RESISTOR, Composition, 1.2K,. 5%, 1/4W		RC07GF122J
R4	RESISTOR, Composition, 3.0K, 5%, 1/4W		RC07GF302J
R5	RESISTOR, Composition, 270K, 5%, 1/4W		RC07GF274J
R6,8,9	RESISTOR, Composition, 10K, 5%, 1/4W		RC07GF103J
R7	RESISTOR, Composition, 51K, 5%, 1/4W		RC07GF513J
R10	RESISTOR, Composition, 300 ohms, 5%, 1/4W		RC07GF301J
R11	RESISTOR, Composition, 5.1K, 5%, 1/4W		RC07GF512J
R12,14	RESISTOR, Commposition, 120 ohms, 5%, 1/4W		RC07GF121J
Y1	CRYSTAL, 45 MHz	ICM	471260

REF. DESIGN.	DESCRIPTION	MFR.	DRAWING/ PART NO.
A3B3, 45 MHz IF			
C22,30	CAPACITOR, Mica, 100pf		DM15-101J
FL-2,6,7,8	FILTER	Amp	859618-1
J1,2,3,5	JACK	Aep	AEP 112
J4	JACK		UG1619/U
R34,35,36,37	RESISTOR, Composition, 10 ohms, 5%, 1/4W		RCO7GF100J
R41	RESISTOR, Composition, 10K, 5%, 1/4W		RCO7GF103J
A3B3A1, RF AMPLIFIER			
C6,7,8,11	CAPACITOR, Ceramic, .01uf	Spr	TG-510
C9,10	CAPACITOR, Tantalum, 2.2uf, 15V	Kemet	T310A225K015AS
C38,39	CAPACITOR, Ceramic, .1uf	Erie	8121-M050-651-104Z
Q1	TRANSISTOR, FET	Signetics	SD306
R2	RESISTOR, Composition, 27K, 5%, 1/4W		RCO7GF273J
R3	RESISTOR, Composition, 150K, 5%, 1/4W		RCO7GF154J
R4	RESISTOR, Variable, 100K	Helipot	62PR100K
R5	RESISTOR, Composition, 68K, 5%, 1/4W		RCO7GF683J
R6	RESISTOR, Composition, 10K, 5%, 1/4W		RCO7GF103J

REF. DESIGN.	DESCRIPTION	MFR.	DRAWING/ PART NO.
R7	RESISTOR, Commposition, 100 ohms, 5%, 1/4W		RC07GF101J
T1	TRANSFORMER	MT	M81B-30-302-1
A3B3A2, LP FILTER			
C1	CAPACITOR, Mica, 220pf	Elemenco	DM15111J
C2	CAPACITOR, Mica, 18pf	Elemenco	DM15-180J
C3	CAPACITOR, Mica, 150pf	Elemenco	DM-15-151J
C4	CAPACITOR, Variable, 3/20pf	Erie	518-00A 3.5-20
C5	CAPACITOR, Mica, 47pf	Elmenco	DM15-470J
L1	INDUCTOR, .25uh	MT	8 Turn-#20 wire
L2	INDUCTOR, .18uh	MT	7 Turn-#20 wire
A3B3A3, LO AMPLIFIER/MIXER			
C12,15	CAPACITOR, Ceramic, .01	Spr	TG-S10
C13	CAPCITOR, Tantalum, 2.2uf, 15V	Kemet	T310A225K015AS
C14	CAPACITOR, Tantalum, luf, 15V	Kemet	T310A105K015AS
C16	CAPACITOR, Mica, 100pf	Elmenco	DM15-101J
C17	CAPACITOR, Ceramic, .luf	Erie	8121-100-651-104M
C18	CAPACITOR, Tantalum, 22uf, 15V	Kemet	T310B226K015AS

REF. DESIGN.	DESCRIPTION	MFR.	DRAWING/ PART NO.
C19	CAPACITOR, Variable, 3.5-20pf	Erie	518-000A-3.5-20
C20	CAPACITOR, Mica, 18pf	Elmenco	DM15-180J
C21	CAPACITOR, Variable, 2.5-9pf	Erie	518-000A 2.5-9
D1	DIODE, Silicon		IN4148
L3	INDUCTOR, .18uh	MT	7 Turns #20 Wire
L4	INDUCTOR, .24uh	MT	12 Turns #22 Wire
L17	INDUCTOR, .15uh	Delevan	1025-00
Q3	TRANSISTOR	Signetics	2N5109
R8	RESISTOR, Composition, 150 ohms, 5%, 1/4W		RC07GF151J
R11,12,16	RESISTOR, Composition, 200 ohms, 5%, 1/4W		RC07GF201J
R13	RESISTOR, Composition, 4.7K, 5%, 1/4W		RC07GF472J
R14	RESISTOR, Composition, 300 ohms, 5%, 1/4W		RC07GF301J
R15	RESISTOR, Composition, 47 ohms, 5%, 1/4W		RC07GF470J
T2	TRANSFORMER	MT	M81B-30-302-2
T3	TRANSFORMER	MT	M81B-30-302-3
T4	TRANSFORMER	MT	M81B-30-302-4
U1	INTEGRATED CIRCUIT, Mixer	Siliconix	U350

REF. DESIGN.	DESCRIPTION	MFR.	DRAWING/ PART NO.
A3B3A4, 45 MHz RF AMPLIFIER			
C31	CAPACITOR, Ceramic, .01uf	Spr	TG-510
C32	CAPACITOR, Ceramic, .001uf	Spr	5GA-D10
L10	INDUCTOR, Fixed, 100uh	Delevan	1537-76
Q4	TRANSISTOR		SD306
R21	RESISTOR, Composition, 150K, 5%, 1/4W		RC07GF154J
R22	RESISTOR, Composition, 43K, 5%, 1/4W		RC07GF433J
R24	RESISTOR, Composition, 22K, 5%, 1/4W		RC07GF223J
R25	RESISTOR, Variable, 100K	Beckman	62PR100K
A3B3A5, 45 MHz RF AMPLIFIER			
C23	CAPACITOR, Ceramic, .01uf	Spr	TG-510
C25	CAPACITOR, Ceramic, .001uf	Spr	5GA-D10
L5	INDUCTOR, Fixed, 100uh	Dewlevan	1537-76
Q2	TRANSISTOR,	Signetics	SD306
R16	RESISTOR, Composition, 150K, 5%, 1/4W		RC07GF154J
R17	RESISTOR, Composition, 43K, 5%, 1/4W		RC07GF433J
R19	RESISTOR, Composition, 22K, 5%, 1/4W		RC07Gf223J
R20	RESISTOR, Variable, 100K	Beckman	62PR100K

REF. DESIGN.	DESCRIPTION	MFR.	DRAWING/ PART NO.
A3B3A6, 2 MHz FILTER			
C26,27,29	CAPACITOR, Mica, 250pf	Elmenco	DM15-251J
C28	CAPACITOR, Mica, 15pf		DM15-150J
L6,8	INDUCTOR, Airwound	MT	4 Turns #20 Wire
L7	INDUCTOR, Fixed, 1.5uh	Delevan	1025-24
L9	INDUCTOR, Airwound	MT	3 Turns #20 Wire
R37,38	RESISTOR, Composition, 560 ohms, 5%, 1/4W		RC07GF561J
A3B3A7, 2 MHz FILTER			
C34,35,37	CAPACITOR, Mica, 250pf	Elmenco	DM15-251J
C36	CAPACITOR, Mica, 15pf	Elmenco	DM15-150J
L11,13	INDUCTOR, Airwound	MT	4 Turns #20 Wire
L12	INDUCTOR, Fixed, 1.5uh	Delevan	1025-24
L14	INDUCTOR, Airwound	MT	3 Turns, #20 Wire
R39,40	RESISTOR, Composition, 560 ohms, 5%, 1/4W		RC07GF561J

REF. DESIGN.	DESCRIPTION	MFR.	DRAWING/ PART NO.
A3B4, 45/13.5 MHz CONVERTER			
C1,12,14	CAPACITOR, Ceramic, .1uf, 10%, 100V	Erie	8131-100-651-104M
C2	CAPACITOR, Mica, 220pf, 5%		DM15-221J
C3,4,6,11,13 16,17	CAPACITOR, Ceramic, .01uf, 10%, 100V	Sprague	TG-510
C7	CAPACITOR, Ceramic, 18pf, N330		10TCS-Q18
C8	CAPACITOR, Ceramic, 5.6pf, N750		10TCU-V56
C9	CAPACITOR, Ceramic, 5.6pf, N750		10TCU-V56
C18	CAPACITOR, Mica, 39pf		DM15-390J
CR1	DIODE, Var Capacitor	Mot	MV-1403
D1	DIODE, Silicon		1N4148
FL1	FILTERCON, Feedthru	Erie	1203-050
FL2,3,4,5	FILTERCON, Feedthru	Aep	859618-1
J1,2	CONNECTOR, Min-RF		UG1619/U
L2	INDUCTOR, Variable, .27uh	Cambion	558-7107-06
Q1	TRANSISTOR, Silicon		2N5109
R1	RESISTOR, Fixed 150 ohms, 5%, 1/4W		RC07GF151J
R3	RESISTOR, Fixed, 6.8K, 5%, 1/4W		RC07GF682J
R4	RESITOR, Fixed, 200 ohma, 5%, 1/4W		RC07GF201J
R6	RESISTOR, Fixed, 330 ohms, 5%, 1/4W		RC07GF330J

REF. DESIGN.	DESCRIPTION	MFR.	DRAWING/ PART NO.
R7,9	RESISTOR, Fixed, 100K, 5%, 1/4W		RC07GF104J
R8	RESISTOR, Fixed, 10K, 5%, 1/4W		RC07GF103J
R11	RESISTOR, Fixed, 10 ohms, 5%, 1/4W		RC07GF100J
T1	TRANSFORMER	MT	M81B30-302-5
T2	TRANSFORMER	MT	M81B30-302-6
T3	TRANSFORMER	MT	81B30-302-3
U1	INTEGRATED CIRCUIT, Mixer	Silicon	U350
U2	INTEGRATED CIRCUIT	Mot	MC1648

REF. DESIGN.	DESCRIPTION	MFR.	DRAWING/ PART NO.
A4, 45-75 MHz SYNTHESIZER			
A4B1, 20-29.999 MHz SYNTHESIZER			
C1,2,8,13	CAPACITOR, Ceramic, .1ufd, 20%, 50V	Erie	8121-050-651-104M
C3,4,5,6,11	CAPACITOR, Ceramic, .01uf, 20%, 50V	Erie	8121-050-651-103M
C7,14,15	CAPACITOR, Tantalum, 10ufd, 20%, 10V		T390B106M010AS
C19,10,12	CAPACITOR, Ceramic, 1000pf, 10%, 100V	Erie	8121-100X7R0102K
D1	DIODE, Varactor	Mot	MV1404
J1	CONNECTOR, Male, 15 Pin		DAM-15P
J2,3	CONNECTOR		10-1123-188
L1	INDUCTOR, Variable	Cambion	558-1192-05
Q1	TRANSISTOR	Mot	MPS6571
Q2	TRANSISTOR	Mot	2N3904
R,1,6,13,16	RESISTOR, Carbon, 4.7K, 5%, 1/8W	AB	RC05GF472JS
R2,3,4	RESISTOR, Carbon, 2K ohms, 5%, 1/8W	AB	RC05GF202JS
R5	RESISTOR, Carbon, 1K ohms, 5%, 1/8W	Beckman	62PR-1K
R7	RESISTOR, Carbon, 100K, 5%, 1/8W	AB	RC05GF193JS
R8	RESISTOR, Carbon, 3.6K, 5%, 1/8W	AB	RC05GF242JS
R9	RESISTOR, Carbon, 3.6K, 5%, 1/8W	AB	RC05GF362JS
R10	RESISTOR, Carbon, 1.5K ohms, 5%, 1/8W	AB	RC05GF152JS

REF. DESIGN.	DESCRIPTION	MFR.	DRAWING/ PART NO.
R11,14	RESISTOR, Carbon, 1.2K ohms, 5%, 1/8W	AB	RC05GF122JS
R12	RESISTOR, Carbon, 100 ohms, 5%, 1/8W	AB	RC05GF101JS
R15,18	RESISTOR, Carbon, 510 ohms, 5%, 1/8W	AB	RC05GF511JS
R17,20	RESISTOR, Carbon, 1K ohm, 5%, 1/8W	AB	RC05GF102JS
R19	RESISTOR, Carbon, 20 ohms, 5%, 1/8W	AB	RC05GF200JS
U1	INTEGRATED CIRCUIT, Phase Detector	Mot	MC4044P
U2	INTEGRATED CIRCUIT, Oscillator	Mot	MC1648P
U3	INTEGRATED CIRCUIT, Controller	Mot	MC12014
U4	INTEGRATED CIRCUIT, Divider	Mot	Plessey
U5,6,7	INTEGRATED CIRCUIT, Counter		74LS190
U8	INTEGRATED CIRCUIT, Buffer	Mot	MC10116P
U9	INTEGRATED CIRCUIT Counter		74LS390

A4B2, 200-29.999 MHz SYNTHESIZER

FL1	FILTER		1020-000
FL2,3,4,	FILTER		859618-1
J1	CONNECTOR		DAM-15P
J2,5	CONNECTOR		UG1619/U
J3,4	CONNECTOR		10-1123-188

REF. DESIGN.	DESCRIPTION	MFR.	DRAWING/ PART NO.
A4B2A1 SUMMING LOOP			
C1,2,8	CAPACITOR, Ceramic, .1ufd, 20%, 50V	Erie	8121-100-651-103M
C3,4,5,6	CAPACITOR, Ceramic, .01ufd, 20%, 50V	Erie	8121-050-651-103M
C7,14,15	CAPACITOR, Tantalum, 10ufd, 20%, 10V	Kemet	T390B106M010AS
C9,10,12	CAPACITOR, Ceramic, 1000pf, 10%, 100V	Erie	8121-100-X7R0102K
D1	DIODE, Varactor	Mot	MV1404
L1	INDUCTOR, Variable	Cambion	558-1192-05
Q1	TRANSISTOR	Mot	MPS6571
R1,6,13	RESISTOR, Carbon, 4.7K ohms, 5%, 1/8W	AB	RC05GF472JS
R2,3,4	RESISTOR, Carbon, 2K ohms, 5%, 1/8W	AB	RC05GF202JS
R5	RESISTOR, Variable, 1K ohm, 5%, 1/8W	Beckman	62PR-1K
R7	RESISTOR, Carbon, 100K ohms,, 5%, 1/8W	AB	RC05GF103JS
R8	RESISTOR, Carbon, 24K, 5%, 1/8W	AB	RC05GF243JS
R9	RESISTOR, Carbon, 3.6K, 5%, 1/8W	AB	RC05GF362JS
R10	RESISTOR, Carbon, 1.5K ohms, 5%, 1/8W	AB	RC05GF152JS
R11,14	RESISTOR, Carbon, 1.2K ohms, 5%, 1/8W	AB	RC05GF122JS
R15	RESISTOR, Carbon, 510 ohms, 5%, 1/8W	AB	RC05GF511JS
R20	RESISTOR, Carbon, 1K ohm, 5%, 1/8W	AB	RC05GF102JS

REF. DESIGN.	DESCRIPTION	MFR.	DRAWING/ PART NO.
U1	INTEGRATED CIRCUIT, Phase Detector	Mot	MC4044P
U2	INNTEGRATED CIRCUIT, Oscillator	Mot	MC1648P
U3	INTEGRATED CIRCUIT, Controller	Mot	MC12014
U4	INTEGRATED CIRCUIT, Divider	Plessey	SP8690B
U5,6,7	INTEGRATED CIRCUIT, Counter		74LS190
U8	INTEGRATED CIRCUIT, Buffer	Mot	MC10116P

A4B2A2, DIVIDE-BY-N

C1	CAPACITOR, Ceramic, 100V	Erie	8121-100-651-103M
C2,4,5	CAPACITOR, Ceramic, .01, 50V	Erie	8121-050-651-103M
C3,13,16	CAPACITOR, Ceramic, .1, 50V	Erie	8121-050-651-104M
C6,8,9,10,11	CAPACITOR, Ceramic, 100V	Erie	8121-100-651-103M
C7,14	CAPACITOR, Tantalum, 2,2uf, 25V	Kemet	T390B225M025ASA
C12	CAPACITOR, Ceramic, 1000pf, 100V	Erie	8121-100X7R0102M
C15,17,18	CAPACITOR, Tantalum, 10ufd, 10V	Kemet	T390B105M010AS
D1	DIODE, Varactor		MV1404
D2,3	DIODE, Silicon		IN4148
L1	INDUCTOR, Variable	Cambion	558-1192-05

REF. DESIGN.	DESCRIPTION	MFR.	DRAWING/ PART NO.
Q1	TRANSISTOR, Silicon	Mot	MPS6571
Q2	TRANSISTOR, Silicon	Mot	2N5143
Q3	TRANSISTOR, Silicon	Mot	2N3904
R1,4,6,16,17	RESISTOR, Carbon, 10K, 5%, 1/8W	AB	RC05GF103JS
R2,14	RESISTOR, Carbon, 2.4K, 5%, 1/8W	AB	RC05GF242JS
R3,5,18	RESISTOR, Carbon, 1.2K, 5%, 1/8W	AB	RC05GF122JS
R8	RESISTOR, Carbon, 470 ohms, 5%, 1/8W	AB	RC05GF471JS
R9	RESISTOR, Carbon, 100K ohms, 5%, 1/8W	AB	RC05GF104JS
R10	RESISTOR, Carbon, 24K, 5%, 1/8W	AB	RC05GF243JS
R11	RESISTOR, Carbon, 39 ohms, 5%, 1/8W	AB	RC05GF390JS
R12	RESISTOR, Carbon, 150 ohms, 5%, 1/8W	AB	RC05GF151JS
R13	RESISTOR, Carbon, 680 ohms, 5%, 1/8W	AB	RC05GF681JS
R15	RESISTOR, Carbon, 8200 ohms, 5%, 1/8W	AB	RC05GF822JS
R19	RESISTOR, Carbon, 510 ohms, 5%, 1/8W	AB	RC05GF511JS
R20	RESISTOR, Carbon, 4.7K, 5%, 1/8W	AB	RC05GF472JS
R21	RESISTOR, Carbon, 1K, 5%, 1/8W	AB	RC05GF102JS
R22	RESISTOR, Carbon, 390 ohms, 5%, 1/8W	AB	RC05GF391JS

REF. DESIGN.	DESCRIPTION	MFR.	DRAWING/ PART NO.
R23	RESISTOR, Carbon, 20 ohms, 5%, 1/8W	AB	RC05GF200JS
U1	INTEGRATED CIRCUIT, Phase Detector	Mot	MC4044P
U2	INTEGRATED CIRCUIT, Oscillator	Mot	MC1648P
U3	INTEGRATED CIRCUIT, Flip-Flop	Mot	MC10131
U4	INTEGRATED CIRCUIT, Phase Detector	Mot	MC12040
U5	INTEGRATED CIRCUIT, OP-AMP	Nat	LM741HC
U6	INTEGRATED CIRCUIT, Buffer		MC10116P
U7	INTEGRATED CIRCUIT, Counter		74LS390
A4B3, 45-77 MHz SYNTHESIZER			
FL1	FILTER	USCC	1020-000
FL2,3,4,5,6	FILTER		859618-1
J1	CONNECTOR, Male, 15 Pin		DAM-15P
	CONNECTOR		10-1123-188
A4B3A1, PHASE LOCKED LOOP			
C1,3,4,5,	CAPACITOR, Ceramic, .1ufd, 20%, 50V	Erie	8121-050-651-104M
C2,21	CAPACITOR, Tantalum 10ufd, 20%, 10V	Kemet	T390B106M010AS
C7	CAPACITOR, Ceramic, 4700pf, 10%, 100V	Erie	8111-100-X7R0-471K

REF. DESIGN.	DESCRIPTION	MFR.	DRAWING/ PART NO.
C8,15,17	CAPACITOR, Ceramic, .01ufd, 20%, 50V	Erie	8121-050-651-103M
C9,10,19,22,29	CAPACITOR, Ceramic, 1000pf, 10%, 100V	Erie	8121-100-X7RO-102K
C11	CAPACITOR, Ceramic, .047, 20%, 50V	Erie	8121-050-651-473M
C12,27,28	CAPACITOR, Tantalum, 1ufd, 10%, 25V		T390A105M025AS
C13	CAPACITOR, Tantalum, 6.8ufd, 20%, 16V	Kemet	T390B680M016AS
C14,26	CAPACITOR, Tantalum, 2.2ufd, 20%, 25V	Kemet	T390B225M025AS
C16,23	CAPACITOR, Ceramic, 100pf, 10%, 100V	Erie	8121-100-COGO-101K
C18,20,25	CAPACITOR, Ceramic,, 100V	Erie	8121-100-651-104M
C24	CAPACITOR, Tantalum, 15pf, 10%, 100V	Erie	8111-100-COGO-150K
D1,2,7	DIODE, Silicon		IN4148
D3	DIODE, Ger		IN270
D4	DIODE, Zener, 6.2V 10%, .5W	Mot	IN5234
D5,6	DIODE, Varactor	KSW	KV2201
L1,4,5	INDUCTOR, Molded, 10uh, 10%, 1/8W	Delevan	1025-44
L2	INDUCTOR, Molded, 18uh, 10%	Delevan	1025-50
Q1,5	TRANSISTOR, Silicon, NPN	Mt	2N3904
Q2	TRANSISTOR, Silicon, NPN	Mot	2N5179
Q3	TRANSISTOR, Silicon, PNP	Mot	2N3906
Q4	TRANSISTOR, DG MOS FET	TI	3N211

REF. DESIGN.	DESCRIPTION	MFR.	DRAWING/ PART NO.
R1,12,18,37	RESISTOR, Carbon, 1K ohm, 5%, 1/8W	AB	RC05GF102JS
R2	RESISTOR, Carbon, 100J ohms, 5%, 1/8W	AB	RC05GF104JS
R3,17,19	RESISTOR, Carbon, 20K, 5%, 1/8W	AB	RC05GF203JS
R4,13,34	RESISTOR, Carbon, 2.2K ohms, 5%, 1/8W	AB	RC05GF222JS
R5,22	RESISTOR, Carbon, 200 ohms, 5%, 1/8W	AB	RC05GF201JS
R6	RESISTOR, Carbon, 560 ohms, 5%, 1/8W	AB	RC05GF560JS
R7	RESISTOR, Carbon, 1 M ohm, 5%, 1/8W	AB	RC05GF105JS
R8	POTENTIOMETER, Cermet, 4J, 100K, 5%, 1.5W	Bourns	3339P-1-104
R9,14,15	RESISTOR, Carbon, 750 ohms, 5%, 1/8W	AB	RC05GF751JS
R10,35	RESISTOR, Carbon, 10 ohms, 5%, 1/8W	AB	RC05GF100JS
R11	RESISTOR, Carbon, 470 ohms, 5%, 1/8W	AB	RC05GF471JS
R16	RESISTOR, Carbon, 390 ohms, 5%, 1/8W	AB	RC05GF391JS
R20,21,25	RESISTOR, Carbon, 8.2K ohms, 5%, 1/8W	AB	RC05GF822JS
R23	RESISTOR, Carbon, 1.2K, 5%, 1/8W	AB	RC05GF122JS
R24,32,33,39	RESISTOR, Carbon, 3.6K, 5%, 1/8W	AB	RC05GF362JS
R27	RESISTOR, Carbon, 15K, 5%, 1/8W	AB	RC05GF153JS

REF. DESIGN.	DESCRIPTION	MFR.	DRAWING/ PART NO.
R28	RESISTOR, Carbon, 24K, 5%, 1/8W	AB	RC05GF243JS
R29	RESISTOR, Carbon, 1.5K ohms, 5%, 1/8W	AB	RC05GF152JS
R30	RESISTOR, Carbon, 2K, 5%, 1/8W	AB	RC05GF202JS
R36	RESISTOR, Carbon, 270 ohms, 5%, 1/8W	AB	RC05GF271JS
R38	RESISTOR, Carbon, 150 ohms, 5%, 1/8W	AB	RCo5GF151JS
R40	RESISTOR, Carbon, 10uh, 10%, 1/8W	AB	RC05GF150JS
U1	INTEGRATED CIRCUIT, Phase Detector	Mot	MC4044P
U2	INTEGRATED CIRCUIT Timer	Sig	NE555
U3	INTEGRATED CIRCUIT, OP-AMP	RCA	CA3140
R7	INTEGRATED CIRCUIT	Mot	MC12014
U5	INTEGRATED CIRCUIT Divider	Plessey	SP8690B
U6,7,8	INTEGRATED CIRCUIT Counter		74LS190

A4B3A2, SUMMING LOOP

C1,2,3,4	CAPACITOR, Ceramic, .1ufd, 20%, 50V	Erie	8121-050-651-104M
C6	CAPACITOR, Ceramic, 470pf, 10%, 100V	Erie	8111-100-X7RO-471K
C7,8,9,10,16, 21,22,25,33	CAPACITOR, Ceramic, 1000pf, 10%, 100V	Erie	8121-100-X7RO-102K

REF. DESIGN.	DESCRIPTION	MFR.	DRAWING/ PART NO.
C11,17,32	CAPACITOR, Tantalum, 2.2ufd, 20%, 25V	Kemet	T390B225M025AS
C12,15,18,24	CAPACITOR, Ceramic, .1ufd, 20%, 100V	Erie	8121-100-651-104M
C13	CAPACITOR, Ceramic, 47pf, 10%, 100V	Erie	8121-100-COGO-470K
C14,20,26,29	CAPACITOR, Ceramic, .01ufd, 20%, 50V	erie	8121-050-651-103M
C19,23,30	CAPACITOR, Ceramic, 100pf, 10%, 100V	Erie	8121-100-COGO-101K
C27,28	CAPACITOR, Ceramic, 15pf, 10%, 100V	Erie	8111-100-COGO-150K
C31	CAPACITOR, Tantalum, 10ufd, 20%, 10V	Kemet	T390B106M010AS
D3	DIODE		IN5236
D4,8	DIODE, Zemer, 6.2V, 10%, .5W	Mot	IN5234
D5,6	DIODE, Varactor	Mot	MV1403
D7,9,10	DIODE, Silicon	Fair	IN4148
L1	INDUCTOR, Molded, 10uh, 10%	Delevan	1025-44
L2	INDUCTOR, Molded, 18uh, 10%	Delevan	1025-50
Q1	TRANSISTOR, PNP, Silicon	Mot	2N3906
Q2	TRANSISTOR, D-G-MOS FET	TI	3N211
Q3	TRANSISTOR, PNP, Silicon		2N5143
Q4	TRANSISTOR, NPN, Silicon	Mot	2N5179
Q5	TRANSISTOR,	Mot	2N3904
R1,2,33	RESISTOR, Carbon, 51K, 5%, 1/8W	AB	RC05GF513JS

REF. DESIGN.	DESCRIPTION	MFR.	DRAWING/ PART NO.
R3	RESISTOR, Carbon, 1M ohm, 5%, 1/8W	AB	RC05GF105JS
R4	POTENTIOMETER, Cermet, 4-Turn, 100K, 10%, .5W	Bourns	3339P-1-104
R5,19,35	RESISTOR, Carbon, 100 ohms, 5%, 1/8W	AB	RC05GF101JS
R6,12,30,34,40	RESISTOR, Carbon, 10 ohms, 5%, 1/8W	AB	RC05GF100JS
R7,16	RESISTOR, Carbon, 200 ohms, 5%, 1/8W	AB	RC05GF201JS
R8,38,42	RESISTOR, Carbon, 1K ohm, 5%, 1/8W	AB	RC05GF102JS
R9,10	RESISTOR, Carbon, 750 ohms, 5%, 1/8W	AB	RC05GF751JS
R11	RESISTOR, Carbon, 390 ohms, 5%, 1/8W	AB	RC05GF391JS
R13,14	RESISTOR, Carbon, 10K, 5%, 1/8W	AB	RC05GF103JS
R15	RESISTOR, Carbon, 1.2K, 5%, 1/8W	AB	RC05GF122JS
R17	RESISTOR, Carbon, 3.6K, 5%, 1/8W	AB	RC05GF362JS
R18,27,29	RESISTOR, Carbon, 8.2K, 5%, 1/8W	AB	RC05GF822JS
R20,21	RESISTOR, Carbon, 24K, 5%, 1/8W	AB	RC05GF243JS
R22	RESISTOR, Carbon, 39 ohms, 5%, 1/8W	AB	RC05GF390JS
R23	RESISTOR, Carbon, 150 ohms, 5%, 1/8W	AB	RC05GF150JS
R24	RESISTOR, Carbon, 470 ohms, 5%, 1/8W	AB	RC05GF471JS

REF. DESIGN.	DESCRIPTION	MFR.	DRAWING/ PART NO.
R26,28	RESISTOR, Carbon, 2400 ohms, 5%, 1/8W	AB	RC05GF242JS
R31	RESISTOR, Carbon, 1500 ohms, 5%, 1/8W	AB	RC05GF152JS
R32	RESISTOR, Carbon, 15K, 5%, 1/8W	AB	RC05GF153JS
R36,39	RESISTOR, Carbon, 2000 ohms, 5%, 1/8W	AB	RC05GF202JS
R37,43	RESISTOR, Carbon, 240 ohms, 5%, 1/8W	AB	RC05GF241JS
R41	RESISTOR, Carbon, 270 ohms, 5%, 1/8W	AB	RC05GF271JS
R44,45	RESISTOR, Carbon, 12K, 5%, 1/8W	AB	RC05GF123JS
U1	INTEGRATED CIRCUIT, Phase Detector	Mot	MC4044
U2	INTEGRATED CIRCUIT, OP-AMP	RCA	CA3140
U3	INTEGRATED CIRCUIT, ECL, Flip-Flop	Mot	MC10131
U4	INTEGRATED CIRCUIT, ECL, Phase Detector	Mot	MC12040
U5	INTEGRATED CIRCUIT, OP-AMP	National	LM741CN
U6	INTEGRATED CIRCUIT, ECL, Divider	Plessey	SP8604

A4B4, 45-75 MHz OSCILLATOR

FL1-FL4	FILTER, Connector	Amp	112
J1	CONNECTOR,		UG1619-U
J2	CONNECTOR	Aep	112
C1,2,3,4,6, 7,15	CPACITOR, Ceramic, .01uf	Sprague	TG-510

REF. DESIGN.	DESCRIPTION	MFR.	DRAWING/ PART NO.
C5	CAPACITOR, Tantalum, 68uf, 15V	Kemet	T310C686-015AS
C8,11,19	CAPACITOR, Ceramic, .1uf	Erie	8131-100-651-104M
C9,10,.12,13, 14,16	CAPACITOR, Ceramic, .001uf	Sprague	5GA-D10
C17,18	CAPACITOR, Tantalum, 22uf, 15V	Kemet	T310B226015AS
D1,2	DIODE, Varactor	Mot	MV109
D3	DIODE, Silicon	Mot	IN4148
L1	INDUCTOR, Variable,	Cambion	7107-04
R1	RESISTOR, Composition, 100 ohms, 5%,1/4W		RC07GF101J
R2	RESISTOR, Composition, 24K, 5%, 1/4W		RC07GF243J
R3	RESISTOR, Composition, 1K, 5%, 1/4W		RC07GF102J
R4,7	RESISTOR, Composition, 10K, 5%, 1/4W		RC07GF103J
R5,6,8,9,10, 11,14,15	RESISTOR, Composition, 510 ohms, 5%, 1/4W		RC07GF511J
R12	RESISTOR, Composition, 2K, 5%, 1/4W		RC07GF202J
R13	RESISTOR, Composition, 8.2K, 5%, 1/4W		RC07GF822J
R16	RESISTOR, Composition, 51 ohms, 5%, 1/4W		RC07GF510J
U1	INTEGRATED CIRCUIT	Mot	MC1648P
U2	INTEWGRATED CIRCUIT	Mot	MC120116P
U3	INTEGRATED CIRCUIT	Mot	MC12040P
U4	INTEGRATED CIRCUIT		1458

REF. DESIGN.	DESCRIPTION	MFR.	DRAWING/ PART NO.
A6, DISPLAY ASSEMBLY			
A6B1, DISPLAY BOARD			
C1,2,3,4,5, 6,7,8	CAPACITOR, Ceramic, .1	Erie	8121-050-651-104M
C9	CAPACITOR, Tantalum, 22uf, 16V	Kemet	T390D226M016AS
D1 - D34	DIODE, Silicon		IN4148
DS1 - 8	DISPLAY, 7 Segment	HP	5082-7650
J2,3	CONNECTOR, 16 Pin	EMC	7016-265-5
J4	CONNECTOR, 14 Pin	EMC	7014-265-5
Q1,2	TRANSISTOR, NPN		2N3904
RA1 - RA8	RESISTOR ARRAY	AB	314B331
R1,4	RESISTOR, Composition, 10K, 5%, 1/8W		RC05GF103J
R2,5	RESISTOR, Composition, 100K, 5%, 1/8W		RC05GF104J
R3,6	RESISTOR, Composition, 2.7K, 5%, 1/8W		RC05GF272J
R7,8,9,10,11, 12,13,14	RESISTOR, Composition,, 15 ohms, 5%, 1/8W		RC05GF150J
R15	RESISTOR, Composition, 330 ohms, 5%, 1/8W		RC05GF331J
U1,4	INTEGRATED CIRCCUIT, Counter		74192
U2,5	INTEGRATED CIRCUIT Switch	RCA	CD4053BE
U3	INTEGRATED CIRCUIT GATE		74LS51

REF. DESIGN.	DESCRIPTION	MFR.	DRAWING/ PART NO.
U6,8,10,12, 14,16,18,20	INTEGRATED CIRCUIT Decoder		74LS47
U7,9,11,13, 15,17,19	INTEGRATED CIRCUIT, Counter		74LS192

A6B2, CONTROL BOARD

C1	CAPACITOR, Tantalum, 10uf, 20V	Kemet	T310B106K020AS
C2 - C11	CAPACITOR, Ceramic, .1uf, 100V	Erie	8131-100-651-104M
C12	CAPACITOR, Tantalum, 2.2uf, 20V	Kemet	T310A225020AS
Q1	TRANSISTOR, NPN		2N3904
R1,3,4,5,6	RESISTOR, Composition, 10K, 5%, 1/4W		RC07GF103J
R2	RESISTOR, Composition, 39K, 5%, 1/4W		RC07GF393J
R7	RESISTOR, Composition, 470 ohms, 5%, 1/8W		RC07GF
U1,2	INTEGRATED CIRCUIT, PROM	TI	SN74S288
U3,4,5	INTEGRATED CIRCUIT Comparator		74LS85
U6,7,8,12,13, 14,17,18,19	INTEGRATED CIRCUIT, Adder		MC14560BCP
U9,10,11	INTEGRATED CIRCUIT, Multiplexer		74LS157
U15,16,20,21	INTEGRATED CIRCUIT, Buffer		74LS367

REF. DESIGN.	DESCRIPTION	MFR.	DRAWING/ PART NO.
A6B3, D/A REFERENCE BOARD			
C1,2,3,4,5,6, 7,8,9,10	CAPACITOR, Ceramic, .1uf, 100V	Erie	8131-100-651-104M
DAC-1	D/A CONVERTER	Micro Networks	MN3212
DAC-2	D/A CONVERTER	Micro Netowrks	MN3300
J2	CONNECTOR, 16 Pin	EMC	7016-265-5
J3	CONNECTOR, 14 Pin	EMC	7014-265-5
Q1,2,3,4	TRANSISTOR, NPN		2N3904
Q2	TRANSISTOR, PNP		2N3906
R1,2,3,4,5,6, 9,10,11,12, 13,14,15,16, 17,18,19,24, 25,26,28,59	RESISTOR, Composition, 10K, 5%, 1/4W		RC07GF103J
R7,8,32	RESISTOR, Composition, 100K, 5%, 1/4W		RC07GF104J
R20	RESISTOR, Variable, 20K	Beckman	62PAR-20K
R21	RESISTOR, Composition, 3M ohms, 5%, 1/4W		RC07GF305J
R22,23,31	RESISTOR, Composition, 2.7K, 5%, 1/4W		RC07GF272J
R27	RESISTOR, Composition, 1.3K, 5%, 1/4W		RC07GF132J
R29	RESISTOR, Composition, 39K, 5%, 1/4W		RC07GF393J
R30,43,44	RESISTOR, Variable, 10K	Beckman	62PAR-10K
R33,58	RESISTOR, Composition, 5.1K, 5%, 1/4W		RC07GF512J

REF. DESIGN.	DESCRIPTION	MFR.	DRAWING/ PART NO.
R34	RESISTOR, Composition, 20K, 5%, 1/4W		RC07GF203J
R35	RESISTOR, Variable, 1K	Beckman	62PAR-1K
R36	RESISTOR, Composition, 10 ohms, 5%, 1/4W		RC07GF100J
R37,38,40,41, 42,55,57	RESISTOR, Film, 10K		RN55C1002F
R39	RESISTOR, Film, 4.99K		RN55C4991F
R45	RESISTOR, Variable, 2K	Beckman	62PAR-2K
R46,47	RESISTOR, Variable, 5K	Beckman	62PAR-5K
R48	RESISTOR, Film, 95.3K		RN55C9532F
R49	RESISTOR, Film, 46.4K		RN55C4642F
R50	RESISTOR, Film, 9.09K		RN55C9091F
R51	RESISTOR, Film, 27.4K		RN55C2742F
R52	RESISTOR, Film, 24.9K		RN55C2492F
R53,54,56	RESISTOR, Film, 5.36K		RN55C5361F
U1,2,5,6,7	INTEGRATED CIRCUIT	Mot	MC 14560BCP
U3,4,8,9,10, 12,13,14,15	INTEGRATED CIRCUIT		74LS157
U11.16	INTEGRATED CIRCUIT		74LS367
U17,18	INTEGRATED CIRCUIT		1458

REF. DESIGN.	DESCRIPTION	MFR.	DRAWING/ PART NO.
U19	INTEGRATED CIRCUIT	RCA	CD4051AE
U20	INTEGRATED CIRCUIT, ROM	TI	SN74S288

REF. DESIGN.	DESCRIPTION	MFR.	DRAWING/ PART NO.
A8, RF ASSEMBLY			
C1	CAPACITOR, Tantalum, 15uf, 20V	Kemet	T310B156K020AS
	CONNECTOR	OSM	521-3
J1	CONNECTOR		DEM 9S
L1,2	INDUCTOR, 100uh	Delevan	1025-68
P1 - P53	CONNECTOR, RF, SMA, Male	Solitron	SF2906-6002
P4	CONNECTOR, with Hood		M9P-H10
Z1	YIG FILTER, .44-2.06 Hz	YIG-Tek	102-9
Z2	YIG OSCILLATOR, .570-1.170 GHz	YIG-Tek	302-35
Z3	FILTER, 685 MHz	K&L	5B120-685/20-0
Z4	FILTER, 165 MHz	K&L	3B120-165/20-0
Z5	FREQUENCY DOUBLER	Anzac	D1-4
Z6	HYBRID, 3 dB	Anaren	10014-3
Z7	ATTENUATOR, 20 dB, DC-2 Ghz	Midwest	444-20 dB
Z8	TERMINATION, 50 ohms	Solitron	8018-6005
Z9	PIN SWITCH, SPOT, .05-2 Ghz	Gen. Micro.	M870-19
Z10	PIN SWITCH, SP3T, 2-4 GHz	Gen. Micro	M9230
Z11	FILTER, 180 MHz	K&L	2B120-180/3.4-0
Z12	ATTENUATOR, 1 dB		444-1 dB
Z13	ATTENUATOR, 10 dB		444-10 dB
Z14	RELAY, 3PDT	P/B	KM14D-12VDC

REF. DESIGN.	DESCRIPTION	MFR.	DRAWING/ PART NO.
A8B1, PRESELECTOR LF			
D4,8,12,16, 20,24,28, 32,36,38	DIODE	Litt	RL-4480
FL1 - FL8	FILTER, Feedthru	Erie	1203-050
FL9 - FL17	FILTER, Feedthru	Amp	859-618-1
J1,2,4	CONNECTOR, Female	EFJ	142-0293-001
J3	CONNECTOR, Female	EFJ	142-0296-001
J5	CONNECTOR, Male, 25 Pin	Cinch	DBM-25-P
R13,17,21,25, 34,39,43,47, 49,58	RESISTOR, Composition, 100 ohms, 5%, 1/4W		RC07GF101J
A8B1A1, PRESELECTOR LF A to F			
C51,58,59,66, 67,74,75,82, 83,89,90,96, 98,100	CAPACITOR, Ceramic, .1uf, 100V	Erie	8131-100-651-104M
C53,57	CAPACITOR, Mica, 200pf		DM15-201J
C54,56	CAPACITOR, Mica 1000pf		DM15-102J
C55	CAPACITOR, Mica, 110pf		DM15-111J
C61,65	CAPACITOR, Mica, 750pf		DM15-751J
C62,64	CAPACITOR, Mica, 2200pf		DM19-222J
C63	CAPACITOR, Mica, 300pf		DM15-301J
C69,73	CAPACITOR, Mica, 620pf		DM15-621J

REF. DESIGN.	DESCRIPTION	MFR.	DRAWING/ PART NO.
C70,72	CAPACITOR, Mica, 2400pf		DM15-242J
C71	CAPACITOR, Mica, 360pf		DM15-361J
C77,81	CAPACITOR, Mica, 1300pf		DM19-132J
C78,80	CAPACITOR, Mica, .0033uf, 200V	Spr	192P-33292
C79	CAPACITOR, Mica, 620pf		DM15-621J
C85,87	CAPACITOR, Mica, 1800pf		DM190182J
C86,88	CAPACITOR, Mica, 160pf		DM15-161J
C92,93,94,95	CAPACITOR, Mica, .0039uf, 80V	Spr	192P-3929R8
D18,19,22,23, 26,27,30,31, 34,35	DIODE, Pin	Mot	MPN-3402
L53,57	INDUCTOR, Variable, 2.7uh	Camb	7101-18
L54,56	INDUCTOR, Variable, .47uh	Camb	7101-09
L55,63	INDUCTOR, Variable, 4.7uh	Camb	7101-21
L58,66,74,82	INDUCTOR, Fixed, 100uh	Del	1025-68
L61,65,78,80	INDUCTOR, Variable, 1.8uh	Camb	7107-16
L62,64	INDUCTOR, Variable, .56uh	Camb	7107-10
L69,73,77,81	INDUCTOR, Variable, 3.9uh	Camb	7107-20
L70,72	INDUCTOR, Variable, 1.0uh	Camb	7107-13
L71	INDUCTOR, Variable, 5.6uh	Camb	7107-22
L79	INDUCTOR, Variable, 8.2uh	Camb	7107-24

REF. DESIGN.	DESCRIPTION	MFR.	DRAWING/ PART NO.
L85,87	INDUCTOR, Variable, 6.8uh	Camb	7107-23
L86	INDUCTOR, Variable, 10uh	Camb	7107-25
L92,94	INDUCTOR, Variable, 27uh	Camb	7107-30
L93	INDUCTOR, Variable, 39uh	Camb	7107-32
Q1,2	TRANSISTOR	Sil	2N5432
Q3	TRANSISTOR		2N3906
R30,32,33,36, 37,41,42,45, 46,60	RESISTOR, Composition, 1.8K, 5%, 1/4W		RC07GF182J
R48	RESISTOR, Composition, 1K, 5%, 1/4W		RC07GF102J
R52,53,55,99, 100,101,102, 103	RESISTOR, Composition, 10K, 5%, 1/4W		RC07GF103J
R54,57	RESISTOR, Composition, 2.2K, 5%, 1/4W		RC07GF222J
R56	RESISTOR, Composition, 6.8K 5%, 1/4W		RC07GF682J
R62,63	RESISTOR, Composition, 100 ohms, 5%, 1/4W		RC07GF101J
R94,95,96,97, 98	RESISTOR, Composition, 270 ohms, 5%, 1/4W		RC07GF271J

A8B1A2, PRESELECTOR LF (H-L)

C4,5,6,7,21, 22,29,30,37, 38,45,46,48, 49	CAPACITOR, Ceramic, .1uf, 100V	Erie	8131-100-651-103M
C16,20,26	CAPACITOR, Mica 43pf		DM15-430J
C17,19	CAPACITOR, Mica, 270pf		DM271J

REF. DESIGN.	DESCRIPTION	MFR.	DRAWING/ PART NO.
C18	CAPACITOR, Mica, 30pf		DM15-300J
C24,28	CAPACITOR, Mica, 62pf		DM15-620J
C25,27	CAPACITOR, Mica, 390pf		DM15-391J
C32,36	CAPACITOR, Mica, 82pf		DM15-820J
C33,35	CAPACITOR, Mica, 500pf		DM15-501J
C34	CAPACITOR, Mica, 56pf		DM15-560J
C40,44	CAPACITOR, Mica, 100pf		DM15-101J
C41,43	CAPACITOR, Mica, 620pf		DM15-621J
C42	CAPACITOR, Mica, 68pf		DM15-680J
D2,3,6,7,10, 11,14,15	DIODE, Pin	Mot	MPN-3402
D5,9,17	DIODE, Silicon		IN4148
L16,20	INDUCTOR, Variable, 1.0uh	Camb	7107-13
L17,19	INDUCTOR, Variable, .15uh	Camb	7107-03
L18	INDUCTOR, Variable, 1.5uh	Camb	7107-15
L21,29,37,45	INDUCTOR, Fixed, 15uh	Del	1025-48
L24.28	INDUCTOR, Variable, 1.2uh	Camb	7107-14
L25,27	INDUCTOR, Variable, .22uh	Camb	7107-05
L26,32,36	INDUCTOR, Variable, 1.8uh	Camb	7107-16
L33,35	INDUCTOR, Variable, .27uh	Camb	7107-06

REF. DESIGN.	DESCRIPTION	MFR.	DRAWING/ PART NO.
L34	INDUCTOR, Variable, 2.7uh	Camb	7107-18
L40,44	INDUCTOR, Variable, 2.2uh	Camb	7107-17
L41,43	INDUCTOR, Variable, .33uh	Camb	7107-07
L42	INDUCTOR, Variable, 3.3uh	Camb	7107-19
K1,2,3	RELAY	Teledyne	732-12
R6,7,11,12,15, 16,19,20,23, 24,27	RESISTOR, Composition, 1.8K, 5%, 1/4W		RC07GF182J
R21,25,28	RESISTOR, Composition, 100 ohms, 5%, 1/4W		RC07GF101J
R54,64,74,84	RESISTOR, Composition, 270 ohms, 5%, 1/4W		RC07GF271J
R104,105,106, 107	RESISTOR, Composition, 10K, 5%, 1/4W		RCo7GF103J

A8B1A3, PRESELECTOR, LF (M)

C8,14	CAPACITOR, Mica, 27pf		DM15-270J
C9,13	CAPACITOR, Mica, 130pf		DM15-131J
C10,12	CAPACITOR, Mica, 18pf		DM15-180J
C11	CAPACITOR, Mica, 150pf		DM15-151J
C15	CAPACITOR, Mica, .1uf, 100V	Erie	8131-100-651-104M
D1	DIODE, Pin	Mot	MPN3402
L8,14	INDUCTOR, Variable, .56uh	Camb	7107-10
L9,11,13	INDUCTOR, Variable, .12uh	Camb	7107-02
L10,12	INDUCTOR, Variable, .82uh	Camb	7107-12

REF. DESIGN.	DESCRIPTION	MFR.	DRAWING/ PART NO.
R8	RESISTOR, Composition, 1.8K, 5%, 1/4W		RC07GF182J
R9	RESISTOR, Composition, 100 ohms, 5%, 1/4W		RC07GF101J

A8B2, PRESELECTOR HF

C1,2	CAPACITOR, Ceramic, .01uf, 50V	Erie	8131-100-651-103M
D1,2,3,4,11, 12,21,22,31, 32,41,42,51, 52,61,62,71, 72,81,82	DIODE, Pin	HP	5082-3042
D13,23,33,43, 53,63,73,83	DIODE, LED	Litt	RL-4480
FL1,2,3,11,12, 13,21,22,23, 31,32,33,41, 42,43,51,52, 53,61,62,63, 71,72,73,81, 92,83	FILTER, Feedthru	Amp	859618-1
J1,2	JACK	EFJ	142-0293-001
J3	CONNECTOR, 15 Pin, Male	Cinch	DAM-15-P
R1,2,11,12,21, 22,31,32,41, 42,51,52,61, 62,71,72,81, 82	RESISTOR, Composition, 1.8K, 5%, 1/4W		RC07GF182J
R14,24,34,44, 54,64,74,84	RESISTOR, Composition, 330 ohms, 5%, 1/4W		RC07GF331J
R13,23,33,43, 53,63,73,83	RESISTOR, Composition, 43K, 5%, 1/4W		RC07GF433J

REF. DESIGN.	DESCRIPTION	MFR.	DRAWING/ PART NO.
A8B2A1, PC ASSEMBLY "N THRU W"			
C11,12,13	CAPACITOR, Variable, 1-.4pf	Joh	9401-4
C14,41,42,43	CAPACITOR, Variable, 2.5-10pf	Joh	9410-1
C21,22,23,31, 32,33	CAPACITOR, Variable,	Joh	9410-0
C24,34	CAPACITOR, Variable, 4-18pf	John	9410-2
C44	CAPACITOR, Variable, 6-35pf	John	9410-3
C51,52,53, 61,62,63	CAPACITOR, Variable, 2.5-9pf	Erie	518-000A-2.5-9
C54	CAPACITOR, Mica, 20pf	Erie	DM15-200J
C64,74	CAPACITOR, Mica, 27pf		DM15-270J
C71,72,73, 81,82,83	CAPACITOR, Variable, 3.5-20pf	Erie	518-000A3.5-20
C84	CAPACITOR, Mica, 33pf		DM15-330J
L11,34	INDUCTOR, Fixed, .04uh		3T-#24 Wire
L12,22,31,41, 74	INDUCTOR, Fixed, .12uh		6T-#20 Wire
L13,21,44,54	INDUCTOR, Fixed, .07uh		4T-#24 Wire
L14,24	INDUCTOR, Fixed, .02uh		2T-#24 Wire
L23,32,53	INDUCTOR, Fixed, .15uh		7T-#24 Wire
L33,42	INDUCTOR, Fixed, .21uh		9T-#14 Wire
L43,61	INDUCTOR, Fixed, .27uh		11T-#24 Wire
L51	INDUCTOR, Variable, .22uh	Camb	71-7-05

REF. DESIGN.	DESCRIPTION	MFR.	DRAWING/ PART NO.
L52,84	INDUCTOR, Variable, .18uh	Camb	7107-04
L62,72	INDUCTOR, Variable, .39uh	Camb	7107-08
L63	INDUCTOR, Variable, .47uh	Camb	7107-09
L64	INDUCTOR, Variable, .1uh	Camb	7107-01
L71,81	INDUCTOR, Variable, .33uh	Camb	7107-07
L73	INDUCTOR, Variable, .56uh	Camb	7107-10
L82	INDUCTOR, Variable, .68uh	Camb	7107-001
L83	INDUCTOR, Variable, 1.0uh	Camb	7107-13

A8B3, 470-2000 MHz AMPLIFIER/SWITCH

C1,2,5	CAPACITOR, Chip, 200pf, 10%, 500V	ATC	100-B-201-K-MS-500
C3,4	CAPACITOR, Feedthru, 500pf, 20%, 500VC	Aero	4420-500pf-20%-Z5U
D1,2	DIODE, Silicon		IN4148
FL1,2	FILTER, RFI	AMP	859618-1
J1,2,3	JACK, SMA, Female	EFJ	142-0293-001
L1,2,3	INDUCTOR, Airwound	MT	5 Turns #26
R1,2	RESISTOR, Composition, 1.2K, 5%, 1/4W		RC07GF122J
Z1	PIN SWITCH, SPDT	GHz D	GC-71048R
Z2	AMPLIFIER	Avantek	UTO-2021
Z3	AMPLIFIER	Avantek	UTO-2022

REF. DESIGN.	DESCRIPTION	MFR.	DRAWING/ PART NO.
A8B4, 30-470 MHz AMPLIFIER/5W MIXER			
D1,2	DIODE, Pin	HP	5082-3042
D3,4	DIODE, Silicon		IN4148
FL1,2	FILTER	AMP	859249-1
J1,2,3,4	JACK, SMMA	EFJ	142-0293-001
L1,2,3	INDUCTOR, Airwound	MT	3 Turns #26
R1,2,3	RESISTOR, Composition, 1.8K, 5%, 1/4W		RC07GF182J
Z1	AMPLIFIER	Avantek	UTO-511
Z3	MIXER	Anzac	MD-113
A8B5, 1-2 GHz AMPLIFIER			
FL1	FILTER, Feedthru	AMP	859618-1
J1,2	JACK, SMA	EFJ	142-0293-001
U1	INTEGRATED CIRCUIT	Avantek	UTO2003
A8B6, LO SWITCH/MIXER			
C13,5,7	CAPACITOR, Chip, 200pf	ATC	100-B-201-K-MS-500
C2,46	CAPACITOR, Feedthru 500pf	Aero	4420-500pf-20%-Z5U
FL1,2,3	FILTER	AMP	859618-1
J1,2,3,4,5	JACK, 5 Ma	EFJ	142-0293-001
L1,2,3,4	INDUCTOR, Airwound,	MT	3 Turns #26
R1,2,3	RESISTOR, Composition, 1.2K, 5%, 1/4W		RC07GF122J
Z1,2	SWITCH, Pin	GHz Dev	GC-71048R
Z3	MIXER	Anzac	MD123

REF. DESIGN.	DESCRIPTION	MFR.	DRAWING/ PART NO.
A8B7, 160 MHz FIRST IF			
C1,2	CAPACITOR, Mica, 130pf, 5%		DM-15-131J
C3	CAPACITOR, Chip, 470pf, 5%	ATC	100B-471KC
FL1	FILTER	AMP	859640-1
J1,2,3,4	JACK, SMA	EFJ	142-0293-001
L1,3	INDUCTOR, Fixed, .47uh	Delevan	1025-12
L2	INDUCTOR, Fixed, .68uh	Delevan	1025-16
R1	RESISTOR, Composition, 10 ohms, 5%, 1/4W		RC07GF100J
Z1	DIVIDER, Power	MCL	PSC-2-1
Z2	MIXER	MCL	SRA-1
Z3	AMPLIFIER	Avantek	UTO502
A8B8, YIG CONTROLLER			
C1	CAPACITOR, Ceramic, .047, 20%, 50V		8121-050-651-473M
C2,4	CAPACITOR, Ceramic, .001uf, 100V	Sprague	5GA-D10
C3	CAPACITOR, Mica, 500pf		DM15-501J
C5,6	CAPACITOR, Ceramic, .1uf, 100V	Erie	8131-100-651-104M
C7	CAPACITOR, Ceramic, .1uf, 100V	Erie	8121-100-651-104M
R1,3,4,5,7,9, 10,11	RESITOR, Metal Film, 1K, 1%, 1/8W		RN55D1001F
R2	RESISTOR, Metal Film, 100K		RN55D1003F

REF. DESIGN.	DESCRIPTION	MFR.	DRAWING/ PART NO.
R6	RESISTOR, Wirewound, 75 ohms, 5W	Dale	RH5-75 ohms
R8	RESISTOR, Metal Film 499K, 1%, 1/8W		RN55D4993J
R12	RESISTOR, Wirewound, 40 ohms, 5W	Dale	RH5-40 ohms
R13,14	RESISTOR, Metal Film, 4.75K, 1%, 1/8W		RN55D4751F
R15,16	RESISTOR, Wirewound, 10 ohms, 1.5W	Ohmite	995-1.5-10 ohms
U1,3	INTEGRATED CIRCUIT		LM308AH
U2.4	INTEGRATED CIRCUIT		LH0041G

A8B9, WIDEBAND IF

C1,3,6,16,26, 35,42,46,63, 67,73,74	CAPACITOR, Variable, 1-10pf	Johanson	5202
C2	CAPACITOR, Ceramic, 2.7pf, 5%, 500V	Stackpole	C80-51
C4,C79	CAPACITOR, Mica, 270pf, 5%, 500V	Elm	DM15-271J
C5,11,12,13, 14,21,22,24, 31,32,34,37, 41,44,45,61, 62,65,66	CAPACITOR, Feedthru, 500pf, 500V	Erie	2425-003
C7,17,80	CAPACITOR, Ceramic, 5.1pf, 5%, 500V	Stackpole	C80-51
C8	CAPACITOR, Ceramic, 3.3pf, 5%, 500V	Stackpole	C80-51
C15,25,33	CAPACITOR, Ceramic, .001uf, 20%, 1KV	Spr	5GA-D10

REF. DESIGN.	DESCRIPTION	MFR.	DRAWING/ PART NO.
C23,58	CAPACITOR, Tantalum, 10uf, 20% 20V	Kemet	T310B106K020AS
C27,36,52	CAPACITOR, Ceramic, 4.7pf, 5%, 500V	Stackpole	C80-51
C53,54	CAPACITOR, Ceramic, .1uf, 100V	Erie	8131-100-651-104M
C55	CAPACITOR, .0039uf, 10%, 80V	Erie	192P2229R8
C59	CAPACITOR, Mica, 51pf	Elm	DM15-510J
C71	CAPACITOR, Ceramic, 1.0pf	Stackpole	C80-51
C72	CAPACITOR, Ceramic, 1.2pf	Stackpole	C80-51
C75,76	CAPACITOR, Mica, 10pf	Elm	DM15-100J
C77	CAPACITOR, Mica, 18p	Elm	DM15-180J
C78	CAPACITOR, Ceramic, 8pf	Elm	DM15-0805
D1,2,4,5,6,7, 11,12,13,14, 15,16	DIODE, Hot Carrier	HP	5082-2810
D3,17	DIODE, Silicon		IN4148
FL1-9	FILTER, LP	Erie	1203-050
J1	CONNECTOR, 9 Pin, Male	Cinch	DEM-9P
J2,3	CONNECTOR, Right Angle, SMA	AEP	112
J4,5	CONNECTOR, Female	AEP	1-104
L1	INDUCTOR, Air	MT	81A811-301-12
L2	INDUCTOR, Air	MT	81A811-301-13

REF. DESIGN.	DESCRIPTION	MFR.	DRAWING/ PART NO.
L3	INDUCTOR, Air	MT	81A811-301-14
L4,13	INDUCTOR, Air	MT	81A811-301-15
L5,6	INDUCTOR, Air	MT	81A811-301-16
L7	INDUCTOR, Air	MT	81A811-301-17
L11	INDUCTOR, Air	MT	81A811-301-18
112	INDUCTOR, Air	MT	81A811-301-19
L14-15	INDUCTOR, Air	MT	81A811-301-8
L16	INDUCTOR, Molded, .22uh	Delevan	1025-04
Q1	TRANSISTOR, Rf, NPN	Avantek	AT-17
Q2,3,4,5,6,12, 13,14	TRANSISTOR, RF, NPN	Mot	2N2857
Q7,15	TRANSISTOR, NPN	Mot	2N3906
Q11	TRANSISTOR, NPN	Mot	2N2218
R1,33,67,71,76	RESISTOR, Composition, 10K, 5%, 1/4W		RC07GF103J
R2,68,72,75	RESISTOR, Composition, 4.7K, 5%, 1/4W		RC07GF472J
R3	RESISTOR, Composition, 560 ohms, 5%, 1/4W		RC07GF561J
R4,7,13,29,32, 36,48,74	RESISTOR, Composition, 18 ohms, 5%, 1/4W		RC07GF180J
R5,17,31,41	RESISTOR, Composition, 330 ohms, 5%, 1/4W		RC07GF331J
R6,22,26,65, 82,83	RESISTOR, Composition, 2.2K, 5%, 1/4W		RC07GF222J
R11,43	RESISTOR, Composition, 390 ohms, 5%, 1/4W		RC07GF391J
R12,24,37,83, 88,98	RESISTOR, Composition, 100 ohms, 5%, 1/4W		RC07GF101J

REF. DESIGN.	DESCRIPTION	MFR.	DRAWING/ PART NO.
R14,16	RESISTOR, Composition, 15 ohms, 5%, 1/4W		RC07GF159J
R15	RESISTOR, Composition, 68 ohms, 5%, 1/4W		RC07GF680J
R18,44,73,77	RESISTOR, Composition, 470 ohms, 5%, 1/4W		RC07GF471J
R21	RESISTOR, Composition, 68K, 5%, 1/4W		RC07GF683J
R23,27	RESISTOR, Composition, 1.2K, 5%, 1/4W		RC07GF122J
R25	RESISTOR, Composition, 47K, 5%, 1/4W		RC07GF473J
R34,,42	RESISTOR, Composition, 4.7K, 5%, 1/4W		RC07GF472J
R35,70	RESISTOR, Composition, 910 ohms, 5%, 1/4W		RC07GF911J
R38	RESISTOR, Composition, 6.8K, 5%, 1/4W		RC07GF682J
R45,54	RESISTOR, Composition, 220 ohms, 5%, 1/4W		RC07GF221J
R46,52,79,81	RESISTOR, Compostion, 3.3K, 5%, 1/4W		RC07GF332J
R47,59	RESISTOR, Composition, 100K, 5%, 1/4W		RC07GF104J
R51	RESISTOR, Composition, 3.9K, 5%, 1/4W		RC07GF392J
R53,93	RESISTOR, Composition, 750 ohms, 5%, 1/4W		RC07GF751J
R55	RESISTOR, Variable, 25K	Beckman	62PR25K
R56,84	RESISTOR, Composition, 56K, 5%, 1/4W		RC07GF563J
R57	RESISTOR, Film, 100K		RN55D1003F

REF. DESIGN.	DESCRIPTION	MFR.	DRAWING/ PART NO.
R58	RESISTOR, Composition, 3.6K, 5%, 1/4W		RC07GF362J
R61	RESISTOR, Composition, 910 ohms, 5%, 1W		RC32GF911J
R62	RESISTOR, Composition, 180 ohms, 5%, 1W		RC32GF181J
R66	RESISTOR, Composition, 820 ohms, 5%, 1/4W		RC07GF821J
R69,92	RESISTOR, Composition, 1K, 5%, 1/4W		RC07GF102J
R78,95	RESISTOR, Composition, 680 ohms, 5%, 1/4W		RC07GF681J
R85	RESISTOR, Variable, 100K	Beckman	62PR100K
R86	RESISTOR, Composition, 51K, 5%, 1/4W		RC07GF513J
R91	RESISTOR, Composition, 5.6K, 5%, 1/4W		RC07GF562J
R94	RESISTOR, Composition, 620 ohms, 5%, 1/4W		RC07GF621J
R97	RESISTOR, Composition, 22K, 5%, 1/4W		RC07GF223J
R102	RESISTOR, Composition, 8.2K, 5%, 1/4W		RC07GF822J
R103	RESISTOR, Composition, 300 ohms, 5%, 1/4W		RC07GF301J
U1	INTEGRATED CIRCUIT	RCA	CA3028B
U2	INTEGRATED CIRCUIT	RCA	CA3018
XQ11	SOCKET, 8 Pin, TO05	EMC	6114-188-1
XR55,85	SOCKET, 3 Pin, TO-18	EMC	6120-188-1
XU1	SOCKET, 8 Pinn, TO-5	EMC	6139-188-1
XU2	SOCKET, 12 pin, TO-5	EMC	6141-188-1

REF. DESIGN.	DESCRIPTION	MFR.	DRAWING/ PART NO.
A8B10, 560 MHz to 1170 MHz DIVIDE BY 10			
C1,5,7,8	CAPACITOR, Ceramic, .001uf	Spr	5GA-D10
C2,3,4,6	CAPACITOR, Ceramic, 200pf, 500V	ATC	100B-201-K-MS-500
D1	DIODE, Zener, 5.1V		IN5231
FL-1	FILTER, Feedthru	AMP	859618-1
J1,2	CONNECTOR	EFJ	142-0293-001
R1	RESISTOR, Composition, 56 ohms, 5%, 1/4W		RC07GF560J
R2	RESISTOR, Compostion, 27K, 5%, 1/4W		RC07GF273J
R3	RESISTOR, Composition, 2.7K, 5%, 1/4W		RC07GF272J
U1	AMPLIFIER	Avantek	UTO 1002
U2	INTEGRATED CIRCUIT	Plessey	SP8667B
A8B11, X2 250 MULTI			
C1	CAPACITOR, Mica, 10pf, 5%, 500V	Stackpole	C80-51
C2,3,8,10,13, 15	CAPACITOR, Feedthru, 500pf, 5%	Erie	2425-003
C4,6,11,16	CAPACITOR, Variable, 1-10	Johanson	5202
C5	CAPACITOR, Mica, .1pf	Stackpole	C80-51
C7	CAPACITOR, Mica, 3.9pf, 500V	Stackpole	C80-51
C9	CAPACITOR, Ceramic, .1ufd	erie	8121-050-6511-104M

REF. DESIGN.	DESCRIPTION	MFR.	DRAWING/ PART NO.
C12	CAPACITOR, Mica, 3.3uf	Stackpole	C80-51
C14	CAPACITOR, Tantalum, 10ufd	Kemet	T310B106K20AS
FL1 15	FILTER, Feedthru, 500pf, 5%	Erie	2425-003
L1	INDUCTOR, Air, .02	MT	81A811-301-4
L2,3	INDUCTOR, Air, .02	MT	81A811-301-20
L4	INDUCTOR, Air, .015	MT	81A811-301-6
Q1,2	TRANSISTOR		2N2857
Q3	TRANSISTOR		2N3866
R1	RESISTOR, Composition, 1K ohm, 5%, 1/4W		RC07GF102J
R2,3	RESISTOR, Composition, 100 ohms, 5%, 1/4W		RC07GF101J
R4,9	RESISTOR, Composition, 12 ohms, 5%, 1/4W		RC07GF120J
R5	RESISTOR, Composition, 6.8K, 5%, 1/4W		RC07GF682J
R6	RESISTOR, Composition, 2700 ohms, 5%, 1/4W		RC07GF272J
R7	RESISTOR, Composition, 330 ohms, 5%, 1/4W		RC07GF331J
R10	RESISTOR, Carbon, 4.7K, 5%, 1/4W	AB	RC07GF472J
R11	RESISTOR, Composition, 2K, 5%, 1/4W		RC07GF202J
R12	RESISTOR, Composition, 51 ohms, 5%, 1/4W		RC07GF510J

REF. DESIGN.	DESCRIPTION	MFR.	DRAWING/ PART NO.
A8B12, 50 MHz to 2 GHz AMPLIFIER			
FL1	FILTER, Feedthru	AMP	859618-1
J1,2	JACK, SMA	EFJ	142-0293-001
U1	INTEGRATED CIRCUIT	Avantek	UTO-2021
A8B14, ANTENNA PREAMPLIFIER			
C1,3	CAPACITOR, Ceramic, .1uf	Erie	8131-100-651-104M
C2,4	CAPACITOR, Tantalum, 15uf, 20%, 20V	Kemet	T310B156K020AS
C5	CAPACITOR, Mica, 100pf		DM15-101J
C6	CAPACITOR, Tantalum, 10uf, 20V	Kemet	
J1	JACK, FM		3052-0000-10
J2	JACK, RF, SMA	Kings	874-7
J13	JACK, RF	OSM	21011
Q1	TRANSISTOR, FET	Signetics	SD201
R1	RESISTOR, Composition, 1M ohm, 5%, 1/4W		RC07GF105J
R2,5	RESISTOR, Composition, 100 ohms, 5%, 1/4W		RC07GF101J
R3	RESISTOR, Composition, 10K, 5%, 1/4W		RC07GF103J
R4	RESISTOR, Composition, 4.7K, 5%, 1/4W		RC07GF272J
S1	SWITCH, Toggle, DPDT	JBT	SF22SCW-191

REF. DESIGN.	DESCRIPTION	MFR.	DRAWING/ PART NO.
A8B15, RF SWITCHING LOGIC			
C1,2,3,4,5	CAPACITOR, Ceramic, .1uf	Erie	8121-M050-651-104Z
D1,2,3,4,5,6	DIODE, Silicon		IN4148
Q1,2,3,4,5,6, 7,8	TRANSISTOR, Silicon		2N5193
Q9,10	TRANSISTOR, Silicon		2N5190
Q13,14	TRANSISTOR, Silicon		2N3906
R1,2,11,12,18, 19,47	RESISTOR, Composition, 1K, 5%, 1/4W		RC07GF102J
R3,4,5,13,14, 15,20,21,22, 55	RESISTOR, Composition, 10K, 5%, 1/4W		RC07GF103J
R6,8,16,23,42, 45	RESISTOR, Composition, 4.7K, 5%, 1/4W		RC07GF472J
R7,9,10,17,24	RESISTOR, Compostion, 1.2K, 5%, 1/4W		RC07GF122J
R25	RESISTOR, Compostion, 7.5K, 5%, 1/4W		RC07GF752J
R26,27,29,31, 33,35,37,39, 56	RESISTOR, Compositon, 100K, 5%, 1/4W		RC07GF104J
R28,30,32,34, 36	RESISTOR, Composition, 15K, 5%, 1/4W		RC07GF153J
R38,40	RESISTOR, Composition, 3.3K, 5%, 1/4W		RC07GF332J
R43,46,54	RESISTOR, Composition, 2,2K, 5%, 1/4W		RC07GF222J
R44	RESISTOR, Composition, 560 ohms, 5%, 1/4W		RC07GF561J

REF. DESIGN.	DESCRIPTION	MFR.	DRAWING/ PART NO.
U1	INTEGRATED CIRCUIT, PROM	TI	SN74S288
U2,3	INTEGRATED CIRCUIT, Dual OP AMP		1458
U4,5,6,7	INTEGRATED CIRCUIT, Driver		LH0002C
U8,9	INTEGRATED CIRCUIT, Hex Inverter		7406
XU1	INTEGRATED CIRCUIT SOCKET, 16 Pin		71016-265-5

A8B16, 180/260 MHz PHASE LOCK LOOP

C21	CAPACITOR, Ceramic, 100pf, 10%, 100V	Erie	8121-100-COGO-101K
J1,2,5	JACK		50-647-000-31
J3,4	JACK		142-0293-001
FL1,2,3,4,5,6	FILTER		2425-003
FL7,8	FILTER		VK200-10/3B
R1	RESISTOR, Carbon, 10 ohms, 5%, 1/8W		RC05GF100J

A8B16A1, 180 MHz

C1,11,15,17	CAPACITOR, Ceramic, .1ufd, 20%, 50V	Erie	8121-050-651-104M
C2,3,19	CAPACITOR, Ceramic, .01uf, 20%, 50V	Erie	8121-050-651-103M
C4,14	CAPACITOR, 10pf	Erie	8101-1000-COGO-100D
C5,6,18	CAPACITOR, 22pf, 5%, 100V	Erie	8111-100-COGO-220J

REF. DESIGN.	DESCRIPTION	MFR.	DRAWING/ PART NO.
C7,13,16	CAPACITOR, Ceramic, 100pf, 10%, 100V	Erie	8121-100-COGO-101K
C8,22	CAPACITOR, Tantalum, 2.2ufd, 20%, 25V	Kemet	T390B225M025AS
C9,12	CAPACITOR, Ceramic, 1000uf, 10%, 100V	Erie	8121-100X7RO-102K
C10	CAPACITOR, Tantlaum, 10uf, 20%, 10V	Kemet	T390B106M010AS
C20	CAPACITOR, Variable, 7-40pf	Erie	518-000G7-40
D1	DIODE, Zener, 6.2V	Mot	IN5234
D2	DIODE, Varactor,	Mot	MV109
D3,4	DIODE, Silicon		IN4148
L3	INDUCTOR, Molded, 6.8mh, 10%	Delevan	1025-40
L4,2	INDUCTOR, Open-Air,		
Q1	TRANSISTOR, Silicon, NPN	Mot	MPS6571
Q2	TRANSISTOR	Mot	2N3906
Q3	TRANSISTOR, D-G MOS FET	TI	3N211
Q4,5,6	TRANSISTOR, NPN	Mot	2N5179
R1,14,15	RESISTOR, Carbon, 10K ohms, 5%, 1/8W	AB	RC05GF103JS
R2,13,18,24,29	RESISTOR, Carbon, 10 ohms, 5%, 1/8W	AB	RC05GF100JS
R3,4,7,17,20	RESISTOR, Carbon, 4.7K ohms, 5%, 1/8W		RC05GF472JS
R5	RESISTOR, Carbon, 820 ohms, 5%, 1/8W	AB	RC05GF821JS
R6	RESISTOR, Carbon, 47K ohmms, 5%, 1/8W	AB	RC05GF473JS

REF. DESIGN.	DESCRIPTION	MFR.	DRAWING/ PART NO.
R8.16	RESISTOR, Carbon, 100 ohms, 5%, 1/8W	AB	RC05GF101JS
R9	RESISTOR, Carbon, 2.7 ohms, 5%, 1/8W	AB	RC05GF2R7JS
R10	RESISTOR, Carbon, 8.2K, 5%, 1/8W	AB	RC05GF822JS
R11	RESISTOR, Carbon 3.6K, 5%, 1/8W	AB	RC05GF362JS
R12,22,26,31,	RESISTOR, Carbon, 1.0K, 5%, 1/8W	AB	RC05GF102JS
R19	RESISTOR, Carbon, 470 ohms, 5%, 1/8W	AB	RC05GF471JS
R21	RESISTOR, Carbon, 20 ohms, 5%, 1/8W	AB	RC05GF200JS
R23	RESISTOR, Carbon, 2K ohms, 5%, 1/8W	AB	RC05GF202JS
R25,27	RESISTOR, Carbon, 270 ohms, 5%, 1/8W	AB	RC05GF271JS
R28	RESISTOR, Carbon, 15K ohms, 5%, 1/8W	AB	RC05GF153JS
R30	RESISTOR, Carbon, 200 ohms, 5%, 1/8W	AB	RC05GF201JS
R32	RESISTOR, Carbon, 47 ohms, 5%, 1/8W	AB	RC05GF470JS
R33	RESISTOR, Carbon, 1K ohm, 5%, 1/8W	AB	RC07GF102J
U1	INTEGRATED CIRCUIT, Phase Detector		MC4044
U2	INTEGRATED CIRCUIT, Flip-Flop		74LS73
U3	INTEGRATED CIRCUIT, Prescaler, divide by 9	Plessey	SP8743B

REF. DESIGN.	DESCRIPTION	MFR.	DRAWING/ PART NO.
A8B16A2, 260 MHz			
C1,212	CAPACITOR, Ceramic, .1ufd, 20%, 50V	Erie	8121-050-651-104M
C3,4,5,19	CAPACITOR, Ceramic, .01ufd, 20%, 50V	Erie	8121-050-651-103M
C6,13,14,15,16	CAPACITOR, Cweramic,, 1000pf, 10%, 100V	Erie	8121-1200-XR70-102K
C7,8,9,10	CAPACITOR, Ceramic, 10pf, 10%, 100V	Erie	8101-100-COGO-100D
C11,20,24	CAPACITOR, Tantalum, 2.2ufd, 20%, 25V	Kemet	T390B225M025AS
C17,25	CAPACITOR, Ceramic, 4.7pf	Erie	8101-100-COHO-4790
C18	CAPACITOR, Ceramic, 100pf	Erie	8121-100-COGO-101K
C21	CAPACITOR, Ceramic, 3.3pf	Erie	8101-100-COJO-339C
C22,23	CAPACITOR, Tantalum, 10ufd	Kemet	T390B106M010AS
D1	DIODE, Zener	Mot	IN5234
D2	DIODE, Varactor	Mot	MV109
D3	DIODE, Silicon		IN4148
L2	INDUCTOR, 2 Turns, .125" Dia.		
L3	INDUCTOR, Molded, 4.7uh, 10%	Delevan	1025-36
L4	INDUCTOR, 3 Turns, .125" Dia		
Q1	TRANSISTOR, Silicon, PNP	Mot	2N3906
Q2	TRANSISTOR, D-G MOS FET	TI	3N211

REF. DESIGN.	DESCRIPTION	MFR.	DRAWING/ PART NO.
Q3	TRANSITOR, Silicon, NPN	Mot	2N5179
R1,12,14,17	RESISTOR, Carbon, 8.2K, 5%, 1/8W	AB	RC05GF822JS
R2,5,9,20,30	RESISTOR, Carbon, 10 ohms, 5%, 1/8W	AB	RC05GF100JS
R3,4,11,21	RRESISTOR, Carbon, 4.7K, 5%, 1/8W	AB	RC05GF472JS
R6,7,11,29	RESISTOR, Carbon, 1000 ohms, 5%, 1/8W	AB	RC05GF102JS
R8,10	RESISTOR, Carbon, 470 ohms, 5%, 1/8W	AB	RC05GF471JS
R13,24,26	RESISTOR, Carbon, 1500 ohms, 5%, 1/8W	AB	RC05GF152JS
R15,23	RESISTOR, Carbon, 3600 ohms, 5%, 1/8W	AB	RC05GF362JS
R16,31	RESISTOR, Carbon, 240 ohms, 5%, 1/8W	AB	RC05GF241JS
R19	RESISTOR, Carbon, 39 ohms, 5%, 1/8W	AB	RC05G390JS
R22	RESISTOR, Carbon, 1.2K, 5%, 1/8W	AB	RC05GF122JS
R25	RESISTOR, Carbon, 100 ohms, 5%, 1/8W	AB	RC05GF101JS
R27	RESISTOR, Carbon, 15K ohms, 5%, 1/8W	AB	RC05GF153JS
R28	RESISTOR, Carbon, 2K, 5%, 1/8W	AB	RC05GF202JS
U1	INTEGRATED CIRCUIT, Flip-Flop		74LS73
U2	INTEGRATED CIRCUIT Phase Detector	Mot	MC4044P
U3	INTEGRATED CIRCUIT, OP-AMP	RCA	CA3140

REF. DESIGN.	DESCRIPTION	MFR.	DRAWING/ PART NO.
U4	INTEGRATED CIRCUIT, Controller	Mot	MC12014
U5,6	INTEGRATEC CIRCUIT, Counter		74LS190
U7	INTEGRATED CIRCUIT, Preselector	Plessey	SP8690B
U8	INTEGRATED CIRCUIT Preselector	Plessey	S8604B
A8B17, YIG PHASE LOCK LOOP FILTER			
J1	CONNECTOR, 15 Pin, Male		859756-1
J2,3	CONNECTOR		10-1123-188
A8B17A1, DIVIDE BY N			
C1,2	CAPACITOR, Ceramic, .1	Erie	8121-050-651-104M
C3,6,7	CAPACITOR, Tantalum, 10ufd, 10V	Kemet	T390B106M010AS
C4,5	CAPACITOR, Ceramic, 1000pf	Erie	8121-100-X7R0-102K
R1	RESISTOR, Carbon, 10 ohms, 5%, 1/8W	AB	RC05GF100JS
R2	RESISTOR, Carbon, 2K ohms, 5%, 1/8W	AB	RC05GF202JS
R3,5	RESISTOR, Carbon, 3.6K ohms, 5%, 1/8W	AB	RC05GF362JS
R4	RESISTOR, Carbon, 1.5K ohms, 5%, 1/8W	AB	RC05GF152JS
R6	RESISTOR, Carbon, 100 ohms, 5%, 1/8W	AB	RC05GF101JS
R7	RESISTOR, Carbon, 51 ohms, 5%, 1/8W	AB	RC05GF510JS

REF. DESIGN.	DESCRIPTION	MFR.	DRAWING/ PART NO.
U1	INTEGRATED CIRCUIT, Controller	Mot	MC1201
U2,3,4	INTEGRATED CIRCUIT, Counter		74LS190
U5	INTEGRATED CIRCUIT, Presealer	Plessey	Sp8690B

A8B17A2, DETECTOR-FILM

C1,2,3,4	CAPACITOR, Ceramic, .1ufd, 20%, 50V	Erie	8121-050-651-104M
C7,8,9	CAPACITOR, .1uf, 20%, 100V	Erie	8121-100-651-104M
C6	CAPACITOR, Ceramic, .01	Erie	8121-100-651-103M
C10	CAPACITOR, Ceramic, 1000pf	Erie	8121-100-X7R0-1-2K
C11,12	CAPACITOR, Tantalum, 2.2uf, 25V	Kemet	T390B223M025AS
C13	CAPACITOR, Tantalum, 16V	Kemet	T390B685M016AS
D1,2,3	DIODE, Silicon	Mot	IN4148
D4,5	DIODE, Zener	Mot	IN5234
K1	RELAY	Gris. Bart.	GB-835-C1
R1,6,7,9	RESISTOR, Carbon, 10 ohms, 5%, 1/8W	AB	RC05GF100JS
R2,3,8	RESISTOR, Carbon, 1000 ohms, 5%, 1/8W	AB	RC05GF102JS
R4	RESISTOR, Carbon, 240 ohms, 5%, 1/8W	AB	RC05GF241JS
R5	RESISTOR, Carbon, 470 ohms, 5%, 1/8W	AB	RC05GF471JS

REF. DESIGN.	DESCRIPTION	MFR.	DRAWING/ PART NO.
R10	RESISTOR, Carbon, 100K, 5%,1/8W	AB	RC05GF104JS
R11,12	RESISTOR, Carbon, 150 ohms, 5%, 1/8W	Ohmite	995-1A-150 ohms
U1	INTEGRATED CIRCUIT, Ø DET	Mot	MC4044P
U2	INTEGRATED CIRCUIT, OP-AMP	RCA	CA3140
U3	INTEGRATED CIRCUIT, Buffer	NAT	LH0002CH

REF. DESIGN.	DESCRIPTION	MFR.	DRAWING/ PART NO.
A9, REFERENCE OSCILLATOR			
	CAPACITOR, Tantalum, 68uf, 15V	Kemet	T310B686-015AS
J1,2,3,4	CONNECTOR		UG1619/U
J6,7	CONNECTOR		10-1123-188
J8	CONNECTOR, 9 Pin	DEM-9P	
A9B1, REFERENCE DIVIDER			
C1,2	CAPACITOR, Tantalum, 2.2ufd, 20%, 25V	Kemet	T390B225M025AS
C3	CAPACITOR, Ceramic, .1ufd, 20%, 50V	Erie	8121-050-651-104M
D1	DIODE, Zener, 2.3V, .5W	Mot	IN5223
R1,2	RESISTOR, Carbon, 4.7K ohms, 5%, 1/8W	AB	RC05GF472JS
U1	INTEGRATED CIRCUIT, Regulator, 5.0V	Nat	LM-340LAX-5.0
U2	INTEGRATED CIRCUIT, GATE		74LS54
U3	INTEGRATED CIRCUIT, Counter, Dual		74LS390
Z1	OSCILLATOR, TCXO	Bliley	T26A104
A9B2, 10.7 MHz			
C1,3,7,15	CAPACITOR, Ceramic, .1ufd, 20%, 50V	Erie	8121-050-651-104M
C4,6,9,12	CAPACITOR, Tantalum, 1ufd, 20%, 25V	Kemet	T390A105M025AS
C5	CAPACITOR, Variable, 7.40pf	Erie	518-000-G7-40

REF. DESIGN.	DESCRIPTION	MFR.	DRAWING/ PART NO.
C8,10,14	CAPACITOR, Tantalum, 10ufd, 20%, 10V	Kemet	T390B106M010AS
C11	CAPACITOR, Ceramic, 1000pf, 10%, 100V	Erie	8121-100-X7R0-102
C16	CAPACITOR, Ceramic, 7pf	Elmenco	DM-5-070J
D1	DIODE, Zener	Mot	IN5234
D2	DIODE, Varactor	Mot	MV109
D3	DIODE, Silicon	Far/Mot	IN4148
L1	INDUCTOR, Molded, 100uh, 10%	Delevan	1025-68
L2	INDUCTOR, Molded, 4.7uh, 10%	Delevan	1025-36
L3	INDUCTOR, Molded, 47uh, 10%	Delevan	1025-60
Q1	TRANSISTOR, NPN, 5.1	Mot	MP56571
Q2	TRANSISTOR, NPN, 5.1	Mot	2N3906
Q3	TRANSISTOR, DG, MOS FET	TI	3N211
Q4,5	TRANSISTOR, NPN, 5.1	Mot	2N5179
R1	RESISTOR, Carbon, 10 ohms, 5%, 1.8W	AB	RC05GF100JS
R2,3	RESISTOR, Carbon, 10K ohms, 5%, 1/8W	AB	RC05GF103JS
R4,9	RESISTOR, Carbon, 3.6K ohms, 5%, 1/8W	AB	RC05GF362JS
R5	RESISTOR, Carbon, 47K, 5%, 1/8W	AB	RC05GF473JS
R6,10,19,26	RESISTOR, Carbon, 1000 ohms, 5%, 1/8W	AB	RC05GF102JS
R11,12,13	RESISTOR, Carbon, 8.2K ohms, 5%, 1/8W	AB	RCo5GF822JS

REF. DESIGN.	DESCRIPTION	MFR.	DRAWING/ PART NO.
R14,18,20	RESISTOR, Carbon, 270 ohms, 5%, 1/8W	AB	RC05GF271JS
R15,16,17	RESISTOR, Carbon, 100 ohms, 5%, 1/8W	AB	RC05GF101JS
R17	RESISTOR, Carbon, 2K ohms, 5%, 1/8W	AB	RC05GF202JS
R21,22,24	RESISTOR, Carbon, 4.7K, ohms, 5%, 1/8W	AB	RC05GF472JS
R23	RESISTOR, Carbon, 470 ohms, 5%, 1/8W	AB	RC05GF471JS
R25	RESISTOR, Carbon, 20 ohms, 5%, 1/8W	AB	RC05GF200JS
U1	INTEGRATED CIRCUIT, Phase Detector	Mot	MC4044P
U2	INTEGRATED CIRCUIT, Controller	Mot	MC12014
U3	INTEGRATED CIRCUIT Counter, BCD		74LS190
U4	INTEGRATED CIRCUIT, Counter, Bin		74LS191

A9B3, 55.7 MHz

C1,2,3,9,10, 13,18,20,26	CAPACITOR, Ceramic, .1ufd, 20%, 50V	Erie	8121-050-651-104M
C4	CAPACITOR, Ceramic, 470pf, 10%, 100V	Erie	8111-100-X7R0-471K
C5,8,15,19,21, 22,23	CAPACITOR, Ceramic, 1000pf, 10%, 100V	Erie	8121-100-X7R0-102K
C6	CAPACITOR, Ceramic, .01ufd, 20%, 50V	Erie	8121-050-651-103M
C7	CAPACITOR, Ceramic, .047uf, 20%, 50V	Erie	8121-050-651-473M

REF. DESIGN.	DESCRIPTION	MFR.	DRAWING/ PART NO.
C11,24,25	CAPACITOR, Tantalum, 2.2ufd, 20%, 25V	Kemet	T390B225M025AS
C12,16	CAPACITOR, Ceramic, 100pf, 10%, 100V	Erie	8121-100-COGO-101K
C14,27,28	CAPACITOR, Tantalum, 10ufd, 20%, 10V	Kemet	T390B106M010AS
C17	CAPACITOR, Ceramic, 15pf, 10%, 100V	Erie	8111-100-COGO-150K
D1	DIODE, Zener		IN5234
D2,3	DIODE, Varactor	KSW	KV2201
K4	DIODE, Silicon		IN4148
L1,3	INDUCTOR, Molded, 10uh, 10%	Delevan	1025-44
Q1	TRANSISTOR, DG, MOS FET	TI	3N211
Q2	TRANSISTOR, Silicon	Mot	2N5179
R1,4,26	RESISTOR, Carbon, 10 ohsm, 5%, 1/8W	AB	RC05GF100JS
R2,19,24	RESISTOR, Carbon, 100 ohms, 5%, 1/8W	AB	RC05GF101JS
R3,5	RESISTOR, Carbon, 300 ohms, 5%, 1/8W	AB	RC05GF301JS
R6,18	RESISTOR, Carbon, 200 ohms, 5%, 1/8W	AB	RC05GF201JS
R7	RESISTOR, Carbon, 270K, 5%, 1/8W	AB	RC05GF274JS
R8	POTENTIOMETER, Cermet, 100K ohms, 10%, .5W	Bourns	3339-P-1-104
R9,14,27	RESISTOR, Carbon, 2.2K, 5%, 1/8W	AB	RC05GF222JS
R10,17,29,32	RESISTOR, Carbon, 1.0K, 5%, 1/8W	AB	RC05GF102JS

REF. DESIGN.	DESCRIPTION	MFR.	DRAWING/ PART NO.
R11,12	RESISTOR, Carbon, 750 ohms, 5%, 1/8W	AB	RC05GF751JS
R13	RESISTOR, Carbon, 390 ohms, 5%, 1/8W	AB	RC05GF391JS
R15,22,24,34, 35,36	RESISTOR, Carbon, 3.6K ohms, 5%, 1/8W	AB	RC05GF362JS
R16	RESISTOR, Carbon, 8.2K ohms, 5%, 1/8W	AB	RC05GF822JS
R21	RESISTOR, Carbon, 1.2K ohms, 5%, 1/8W	AB	RC05GF122JS
R23	RESISTOR, Carbon, 1.5K ohms, 5%, 1/8W	AB	RC05GF152JS
R28	RESISTOR, Carbon, 270 ohms, 5%, 1/8W	AB	RC05GF271JS
R30	RESISTOR, Carbon, 220 ohms, 5%, 1/8W	AB	RC05GF221JS
R33	RESISTOR, Carbon, 15K, 5%, 1/8W	AB	RC05GF153JS
U1	INTEGRATED CIRCUIT, Phase Set	Mot	MC4044P
U2	INTEGRATED CIRCUIT, OP-AMP	RCA	CA3140E
U3	INTEGRATED CIRCUIT, Controller	Mot	MC12014
U4	INTEGRATED CIRCUIT, Preselector	Plessey	SP8690B
U5,6,7	INTEGRATED CIRCUIT, Preselector		74LS190
U8	INTEGRATED CIRCUIT, Divider	Plessey	SP8604B

REF. DESIGN.	DESCRIPTION	MFR.	DRAWING/ PART NO.
A10, SCOPE ASSEMBLY			
A10B1, SCOPE ASSEMBLY, BOARD #1			
C13,17,23,24, 25,26,27,28	CAPACITOR, Ceramic, 1uf, 10%, 100V	Erie	8131-100-651-104M
C15,16,18,19	CAPACITOR, Tantalum, 15uf, 20%, 20V	Kemet	T310B156K020AS
C15,20,22	CAPACITOR, Ceramic, .01uf, 100V	Spr	TG-S10
C21,29,30	CAPACITOR, Mica, 100pf, 100V	Elmenco	DM-15-101J
Q6,10,11,15	TRANSISTOR, Silicon		2N3904
Q7,8,9,12,13, 14	TRANSISTOR, Silicon	RCA	2N3440
R22,31,33,36, 37,38,49,51	RESISTOR, Composition, 22K, 5%, 1/4W		RC07GF223J
R23,34,39,52	RESISTOR, Composition, 18K, 5%,1/4W		RC07GF183J
R24,32,40,50	RESISTOR, Composition, 1M ohm, 5%, 1/4W		RC07GF105J
R25,26,42,44	RESISTOR, Composition, 100K, 5%, 1/2W		RC20GF104J
R27,30,41,47	RESISTOR, Composition, 15K, 5%, 1/4W		RC07GF153J
R28,43	RESISTOR, Composition, 2.2K, 5%, 1/4W		RC07GF222J
R29,45	RESISTOR, Composition, 2K, 5%, 1/4W		RC07GF202J
R35,46	RESISTOR, Composition, 9.1K, 5%, 1/4W		RC07GF912J
R53,54,57, 58,59	RESISTOR, Variable, 10K	Beckman	62PAR10K

REF. DESIGN.	DESCRIPTION	MFR.	DRAWING/ PART NO.
R55,56,60	RESISTOR, Composition, 4.7K, 5%, 1/4W		RC07GF472J
U5,6	INTEGRATED CIRCUIT, Analog Switch	RCA	CD 4053A
A10B2, SCOPE ASSEMBLY, BOARD #2			
C1	CAPACITOR, Ceramic, .1uf, 10%, 100V	Erie	8131-100-651-104M
C2	CAPACITOR, Mica, .0022uf, 10%, 200V	Spr	192P22292
C3,7	CAPACITOR, Ceramic, .01uf, 20%, 100V	Spr	TG-S10
C4,5	CAPACITOR, Ceramic, .001uf, 20%, 1KV	Spr	5GA-D10
C6	CAPACITOR, Electrolytic, 500uf, 20%, 25 WVDC	Spr	TVA-1209
C8	CAPACITOR, Ceramic, .05uf, 20%, 500V	Spr	5GA-S50
C9,12	CAPACITOR, Ceramic, .01uf, 20%, 1KV		
C10	CAPACITOR, Tantalum, 5uf, 150V	Spr	500D505F150-CC7
C11	CAPACITOR, Ceramic, .01uf, 500V		5GAS-510
C29	CAPACITOR, Ceramic, .1uf, 1600V	FDYNE	MPE11H
DA1	RECTIFIER BRIDGE, 1/0A, 400V	Varo	VE48X
D1,2	DIODE, Silicon,		IN4934
D3,4	DIODE, Silicon, 50ma, 4KV	Varo	VB40X
J2	RECEPTACLE	Win	JF2S

REF. DESIGN.	DESCRIPTION	MFR.	DRAWING/ PART NO.
Q,3	TRANSISTOR		2N3904
Q2,4	TRANSISTOR	GE	D44C6
R1	RESISTOR, Composition, 1.8K, 5%, 1/4W		RC07GF182J
R2	RESISTOR, Composition, 10K, 5%, 1/4W		RC07GF103J
R3,6	RESISTOR, Composition, 470 ohms, 5%, 1/4W		RC07GF471J
R4,5,11	RESISTOR, Composition, 1K, 5%, 1/4W		RC07GF102J
R7	RESISTOR, Composition, 4.7K, 5%, 1/4W		RC07GF472J
R8	RESISTOR, Composition, 2.7M ohms, 5%, 1/4W		RC07GF275J
R9	RESISTOR, Variable, 250K, 5%, 1/2W		RV6NAYSD254A
R10	RESISTOR, Composition, 240K, 5%, 1/2W		RC20GF244J
R12	RESISTOR, Variable, 1M ohm		RV6NAYSD105A
R13	RESISTOR, Composition, 3M ohms, 5%, 1/2W		RC20GF305J

A10B3, BUFFER/AMPLIFIER

R61,62,63,65	RESISTOR, Composition, 10K, 5%, 1/4W		RC07GF103J
R64,66	RESISTOR, Composition, 100K, 5%, 1/4W		RC07GF104J
U7	INTEGRATED CIRCUIT		1458

REF. DESIGN.	DESCRIPTION	MFR.	DRAWING/ PART NO.
A11, S.C. RECEIVER			
C1,2	CAPACITOR, Film, .0082uf, 10%, 100V	Spr	225P82291
C3	CAPACITOR, Mica, 910pf, 5%, 500V		DM15-911J
C4,8,12,13, 16,26,34	CAPACITOR, Tantalum, 1.0uf, 10%, 15V	Kemet	T310A105K015
C5,9	CAPACITOR, Mica, 4300pf, 5%, 300V		DM15-432J
C6,10	CAPACITOR, Film, .027uf, 10%, 100V	Spr	225P27391
C7,11,14,17, 18,23,24,27, 28,32,33,37, 38,39,40,51, 52	CAPACITOR, Ceramic, .1uf, 10%	Erie	8131-100-651-104M
C15,41	CAPACITOR, Tantalum, 47uf, 10%, 6V	Kemet	T310B476K006
C19,20,21,25, 46,48,49	CAPACITOR, Ceramic, .01uf, 10%, 100V	Erie	8131-100-651-103M
C22,36	CAPACITOR, Mica, 390pf, 5%, 500V		DM15-391J
C29	CAPACITOR, Mica, 820pf, 5%, 500V		DM15-821J
C30	CAPACITOR, Mica, 100pf, 5%, 500V		DM15-101J
C31	CAPACITOR, Film, 3300pf, 10%, 100V	Spr	225P33291
C35,45,47	CAPACITOR, Tantalum, 15uf, 10%, 20V	Kemet	T310B156K020
C42,43	CAPACITOR, Tantalum, 100uf, 10%, 6V	Kemet	T310B107K00G
C44	CAPACITOR, Tantalum, 4.7uf, 10%, 10V	Kemet	T310A475K010

REF. DESIGN.	DESCRIPTION	MFR.	DRAWING/ PART NO.
C50	CAPACITOR, Cramic, .01uf, 10%, 100V	Erie	8131-100-651-103M
D1	DIODE, Silicon		IN4148
L1,3	INDUCTOR, Fixed, 27uh, 10%	Delevan	1025-54
L2	INDUCTOR, Fixed, 47uh, 10%	Delevan	1025-60
L4	INDUCTOR, Fixed, 150uh, 10%	Delevan	1025-72
L5,6	INDUCTOR, Variable, 33uh	Cambion	7107-31
L7	INDUCTOR, Variable, 150uh	Cambion	7107-39
L8,9	INDUCTOR, Fixed, 1000uh, 10%	Delevan	2307-105
Q1	TRANSISTOR, Silicon		2N3904
R1	RESISTOR, Composition, 51 ohms, 5%, 1/4W		RC07GF510J
R2,6,8	RESISTOR, Composition, 330 ohms, 5%, 1/4W		RC07GF331J
R3,4,7	RESISTOR, Composition, 47 ohms, 5%, 1/4W		RC07GF470J
R5,25,53	RESISTOR, Composition, 1K, 5%, 1/4W		RC07GF102J
R9	RESISTOR, Variable, 10K	Beckman	62PR10K
R10	RESISTOR, Film, 4.64K, 1%, 1/8W		RN55D4641D
R11	RESISTOR, Film, 13.7K, 1%, 1/8W		RN55D1372D
R12	RESISTOR, Variable, 1K	Beckman	62PR1K
R13	RESISTOR, Variable, 5K	Beckman	52PR5K
R14,40	RESISTOR, Film, 4.75K, 1%, 1/8W		RN55D4751D

REF. DESIGN.	DESCRIPTION	MFR.	DRAWING/ PART NO.
R15,26	RESISTOR, Film, 5110 ohms, 1%, 1/8W		RN55D5111D
R16,27	RESISTOR, Composition, 47K, 5%, 1/4W		RC07GF473J
R18	RESISTOR, Composition, 390 ohms, 5%, 1/4W		RC07GF391J
R19,24	RESISTOR, Composition, 15K, 5%, 1/4W		RC07GF153J
R20,23	RESISTOR, Composition, 4.7K, 5%, 1/4W		RC07GF472J
R21	RESISTOR, Film, 500 ohms,	Beckman	62PR500
R28	RESISTOR, Composition, 220K, 5%, 1/4W		RC07GF224J
R29	RESISTOR, Variable, 100K	Beckman	62PR100K
R30	RESISTOR, Composition, 1.3K, 5%, 1/4W		RC07GF132J
R31,34,36,39, 43,48,49	RESISTOR, Composition, 10K, 5%, 1/4W		RC07GF103J
R32	RESISTOR, Composition, 1000 ohms, 5%, 1/4W		RC07GF102J
R35	RESISTOR, Composition, 10K, 5%, 1/4W		RC07GF103J
R37,38,41,42, 50	RESISTOR, Composition, 22K, 5%, 1/4W		RC07GF223J
R44	RESISTOR, Composition, 270K, 5%, 1/4W		RC07GF273J
R46,51,56	RESISTOR, Composition, 10K ohms, 5%, 1/4W		RC07GF103J
R47	RESISTOR, Composition, 12K, 5%, 1/4W		RC07GF123J

REF. DESIGN.	DESCRIPTION	MFR.	DRAWING/ PART NO.
R52	RESISTOR, Composition, 13K, 5%, 1/4W		RC07GF132J
R54	RESISTOR, Composition, 10 ohms, 5%, 1/4W		RC07GF100J
R55	RESISTOR, Composition, 2.7 ohms, 5%, 1/4W		RC07GF2R7J
S1	SWITCH, Rotary	Grayhill	71AD30-03-2-AJN
T1	TRANSFORMER	Alladir	65-139
U1,2,3	INTEGRATED CIRCUIT, IF Amplifier	Plessey	SL612C
U4	INTEGRATED CIRCUIT, Detector	Plessey	SL623C
U5,7	INTEGRATED CIRCUIT VCO	Rohm	XR-2207
U6	INTEGRATED CIRCUIT, Detector	RCA	CA2111AE
U8	INTEGRATED CIRCUIT, AGC	Plessey	SL621C
U9	INTEGRATED CIRCUIT, Voltage Regulator	Fairchild	78L06AWC
U10,,11,12,13	INTEGRATED CIRCUIT Dual OP AMP		1458
U14	INTEGRATED CIRCUIT, 1 Shot	Mot	MC851P
Z1	MIXER	Mini-Ckt	SRA-8
Z2	FILTER	Vernitron	TL6D11-12A

REF. DESIGN.	DESCRIPTION	MFR.	DRAWING/ PART NO.
C1,16	CAPACITOR, Tantalum, luf, 35V	Kemet	T392B105M035AS
C2,4,6 thru 15	CAPACITOR, Ceramic, .luf, 50V	Erie	8131-M050-651-104Z
C3,5	CAPACITOR, Tantalum, 22uf, 15V	Kemet	T310B226-015AS
R1,2,45,45,46, 47,48,49,50, 51,52,53,54, 55,56,57,58, 73 thru 86	RESISTOR, Composition, 10K, 5%, 1/4W		RC07GF103J
R3	RESISTOR, Metal Film, 11300 ohms, 1%, 1/8W		RN55D1132F
R4,7,10,13,16, 19,22,25,28, 31,34,37,40, 43	RESISTOR, Variable, 500 ohms	Beckman	52PAR500 ohms
R5	RESISTOR, Metal Film, 249 ohms, 1%, 1/8/w		RN55D2490B
R6	RESISTOR, Metal Film, 9760 ohms, 1%, 1/8W		RN55D9761F
R8	RESISTOR, Metal Film, 1740 ohms, 1%, 1/8W		RN55D1741F
R9	RESISTOR, Metal Film, 9090 ohms, 1%, 1/8W		RN55D9091F
R11	RESISTOR, Metal Film, 2430 ohms, 1%, 1/8W		RN55D2431F
R12	RESISTOR, Metal Film, 7680 ohms, 1%, 1/8W		RN55D7681F
R14	RESISTOR, Metal Film, 3830 ohms, 1%, 1/8W		RN55D3831F
R15	RESISTOR, Metal Film, 5360 ohms, 1%, 1/8W		RN55D5361F
R17	RESISTOR, Metal Film, 6190 ohms, 1%, 1/8W		RN55D6191F

REF. DESIGN.	DESCRIPTION	MFR.	DRAWING/ PART NO.
R18	RESISTOR, Metal Film, 1000 ohms, 1%, 1/8W		RN55D1002F
R20	RESISTOR, Metal Film, 1370 ohms, 1%, 1/8W		RN55D1371F
R21	RESISTOR, Metal Film, 10000 ohms, 1%, 1/8W		RN55D1002F
R23	RESISTOR, Metal Film, 1740 ohms, 1%, 1/8W		RN55D1741F
R24	RESISTOR, Metal Film, 9310 ohms, 1%, 1/8W		RN55D9311F
R26	RESISTOR, Metal Film, 2210 ohms, 1%, 1/8W		RN55D2211F
R27	RESISTOR, Metal Film, 10200 ohms, 1%, 1/8W		RN55D1022F
R29	RESISTOR, Metal Film, 1240 ohms, 1%, 1/8W		RN55D1241F
R30	RESISTOR, Metal Film, 8250 ohms, 1%, 1/8W		RN55D8251F
R32	RESISTOR, Metal Film, 3240 ohms, 1%, 1/8W		RN55D3241F
R33	RESISTOR, Metal Film, 5760 ohms, 1%, 1/8W		RN55D5761F
R35	RESISTOR, Metal Film, 5760 ohms, 1%, 1/8W		RN55D5761F
R36	RESISTOR, Metal Film, 10500 ohms, 1%, 1/8W		RN55D1052F
R38	RESISTOR, Metal Film, 1000 ohms, 1%, 1/8W		RN55D1001F
R39	RESISTOR, Metal Film, 8450 ohms, 1%, 1/8W		RN55D8451F
R41	RESISTOR, Metal Film, 3160 ohms, 1%, 1/8W		RN55D3161F

REF. DESIGN.	DESCRIPTION	MFR.	DRAWING/ PART NO.
R42	RESISTOR, Metal Film, 5490 ohms, 1%, 1/8W		RN55D5491F
R44	RESISTOR, Metal Film, 6040 ohms, 1%, 1/8W		RN55D6041F
R59 thru R72	RESISTOR, Composition, 1M ohm, 5%, 1/4W		RC07GF105J
R87,88,89,93, 94	RESISTOR, Composition, 10 ohms, 5%, 1/4W		RC07GF100J
R90	RESISTOR, Composition, 5.6K, 5%, 1/4W		RC07GF562J
R91	RESISTOR, Composition, 3.3K, 5%, 1/4W		RC07GF332J
R92	RESISTOR, Composition, 8.2K, 5%, 1/4W		RC07GF822J
U1	INTEGRATED CIRCUIT		74L42
U2	INTEGRATED CIRCUIT		7404
U3	INTEGRATED CIRCUIT		7405
U4	INTEGRATED CIRCUIT	RCA	CD 4052A
U5	INTEGRATED CIRCUIT		1458
U6,7,8,9	INTEGRATED CIRCUIT	National	LM339
U10,11,12,13	INTEGRATED CIRCUIT		7486
U14,15,16,17, 18	INTEGRATED CIRCUIT		7426

A12B2, YIG TRACKING BOARD

C1,2,4,5,6,7,8	CAPACITOR, Ceramic, .luf, 100V	Erie	8131-100-651-104M
C3	CAPACITOR, Tantalum, luf, 35V	Kemet	T310A105K035AS
Q1	TRANSISTOR, PNP		2N3906

REF. DESIGN.	DESCRIPTION	MFR.	DRAWING/ PART NO.
Q2	TRANSISTOR, PNP		2N3904
R1	RESISTOR, METAL FILM, 5.36 ohms, 1%, 1/8W		RN55D5361F
R2,5,8,11,14, 17,20,23,26, 52,55,58,61, 67,70,73,76, 79	RESISTOR, METAL FILM, 100 ohms, 1%, 1/8W	Amphenol	3811P-101
R3	RESISTOR, METAL FILM, 412 ohms, 1%, 1/8W		RN55D4120F
R4	RESISTOR, METAL FILM, 5.90K, 1%, 1/8W		RN55D5901F
R6	RESISTOR, METAL FILM, 1.0K, 1%, 1/8W		RN55D1001F
R7,10,22,25, 51,54,57,60, 63,66,69,72, 75,78,	RESISTOR, METAL FILM, 2000 ohms, 1%, 1/8W		RN55D2001F
R9	RESISTOR, METAL FILM, Selected Value		RN55DXXXXF
R12	RESISTOR, METAL FILM, Selected Value		RN55DXXXXF
R13	RESISTOR, METAL FILM, 9.31K, 1%, 1/8W		RN55D9311F
R15	RESISTOR, METAL FILM, 100 ohms, 1%, 1/8W		RN55D1000F
R16	RESISTOR, METAL FILM, 4.22K, 1%, 1/8W		RN55D4221F
R18	RESISTOR, METAL FILM, 348 ohms, 1%, 1/8W		RN55D3480F
R19	RESISTOR, METAL FILM, 6.65K, 1%, 1/8W		RN55D6651F
R21	RESISTOR, METAL FILM, 1000 ohms, 1%, 1/8W		RN55D1001F

REF. DESIGN.	DESCRIPTION	MFR.	DRAWING/ PART NO.
R24	RESISTOR, METAL FILM, Selected Value		RN55DXXXXF
R27	RESISTOR, METAL FILM, Selected Value		RN55DXXXXF
R28,29,30,31, 32,38,39,40, 41,44,46,47, 48,49,91,95 97	RESISTOR, METAL FILM, 10K, 1%, 1/8W		RN55D1002F
R33,34,35,36, 81 thru 90	100K, 1%, 1/8WL FILM,		RN55D1003F
R37	RESISTOR, METAL FILM, 20K, 1%, 1/8W		RN55D2002F
R42	RESISTOR, Composition, 47K, 5%, 1/4W		RC07GF473J
R43	RESISTOR, Variable, 10K	Amp	381110K
R45	RESISTOR, Composition 8.2K, 5%, 1/4W		RC07GF822J
R50	RESISTOR, Composition, 2K, 5%, 1/4W		RC07GF202J
R53	RESISTOR, METAL FILM, Selected Value		RN55DXXXXF
R56	RESISTOR, METAL FILM, Selected Value		RN55DXXXXF
R59	RESISTOR, METAL FILM, Selected Value		RN55DXXXXF
R62	RESISTOR, METAL FILM, Selected Value		RN55DXXXXF
R65	RESISTOR, METAL FILM, Selected Value		RN55DXXXXF
R68	RESISTOR, METAL FILM, 10 ohms, 1%, 1/8W		RN55D10R0F
R71	RESISTOR, METAL FILM, Selected Value		RN55DXXXXF

REF. DESIGN.	DESCRIPTION	MFR.	DRAWING/ PART NO.
R74	RESISTOR, METAL FILM, Selected Value		RN55DXXXXF
R77	RESISTOR, METAL FILM, Selected Value		RN55DXXXXF
R80	RESISTOR, METAL FILM, Selected Value		RN55DXXXXF
R92	RESISTOR, METAL FILM, 9760 ohms, 1%, 1/8W		RN55D9761F
R93	RESISTOR, METAL FILM, 287 ohms 1%, 1/8W		RN55D2870F
R94	RESISTOR, METAL FILM, 3.57K, 1%, 1/8W		RN55D3571F
R96	RESISTOR, Composition, 2.7K, 5%, 1/4W		RC07GF272J
U1,2,6,7	INTEGRATED CIRCUIT, Prog, OP AMP	Harris	HAI-2405
U3	INTEGRATED CIRCUIT		1458
U4	INTEGRATED CIRCUIT		74L00
U5	INTEGRATED CIRCUIT		74L32

A12B3, SWITCHING LOGIC

C1,2,3	CAPACITOR, Tantalum, 22uf, 20V	Kemet	T310B226K020As
D1 thru D13	DIODE, Silicon		IN4148
Q1 thru Q8	TRANSISTOR		2N2905
Q9	TRANSISTOR		2N3906
Q10	TRANSISTOR		2N3904
R1,2,3,4,5,6, 7,8,17	RESISTOR, Composition, 100K, 5%, 1/4W		RC07GF104J
R9,10,11,12, 13,14,15, 16,18	RESISTOR, Composition, 6.8K, 5%, 1/4W		RC07GF682J

REF. DESIGN.	DESCRIPTION	MFR.	DRAWING/ PART NO.
R19,25	RESISTOR, Composition, 10K, 5%, 1/8W		RC07GF103J
R20 thru R24	RESISTOR, Composition, 2.7K, 5%, 1/4W		RC07GF272J
U1	INTEGRATED CIRCUIT, Hex Inv		7406
U2	INTEGRATED CIRCUIT, PROM	TI	SN74S288

A12B4, SWEEP/MARKER GENERATOR

C1	CAPACITOR, Lyler, 1.0uf, 20%, 100V	GE	BA14A105A
C2,4	CAPACITOR, Mica, 100pf, 5%, 500V		DM15101J
C3	CAPACITOR, Tantalum, 1uf, 20%, 35V	Kemet	T310A105K035AS
C5,7	CAPACITOR, Ceramic, .1uf, 100V	Erie	8131-100-651-104M
C6,8	CAPACITOR, Tantalum, 15uf, 20%, 20V	Kemet	T310B156K020AS
C9	CAPACITOR, Ceramic, .01uf, 100V		TG-S10
D1,2,3,5,8,9, 10	DIODE, Silicon		IN4148
D4	DIODE, Silicon		IN4148
D6	DIODE, Zener		IN5230
D7	DIODE, Zener, 6.2V, 5%		IN827
K1,2,3	RELAY, SPDT	GB	GB-935C-1
Q1	TRANSISTOR, FET	Mot	2N4352
Q2	TRANSISTOR, NPN		2N3904

REF. DESIGN.	DESCRIPTION	MFR.	DRAWING/ PART NO.
R1	RESISTOR, Composition, 33K, 5%, 1/4W		RC07GF333J
R2,3,4,17,19 25,26,27,36 37	RESISTOR, Composition, 4.7K, 5%, 1/4W		RC07GF472J
R5	RESISTOR, Composition, 9.1K, 5%, 1/4W		RC07GF912J
R6,7,10,11, 48,52,67, 68,70,71, 77	RESISTOR, Composition, 10K, 5%, 1/4W		RC07GF103J
R8	RESISTOR, Composition, 51K, 5%, 1/4W		RC07GF513J
R9,14,15	RESISTOR, Composition, 2.2K, 5%, 1/4W		RC07GF222J
R12	RESISTOR, Composition, 22K, 5%, 1/4W		RC07GF223J
R13,20	RESISTOR, Composition, 15K, 5%, 1/4W		RC07GF153J
R16	RESISTOR, Composition, 82K, 5%, 1/4W		RC07GF823J
R21,23	RESISTOR, Variable, Film, 10K, 1%, 1/8W	Amph	3811-103
R22	RESISTOR, Composition, 470 ohms, 5%, 1/4W		RC07GF471J
R24	RESISTOR, Composition, 220 ohms, 5%, 1/4W		RC07GF221J
R28	RESISTOR, Composition, 1.3K, 5%, 1/4W		RC07GF132J
R29	RESISTOR, Composition, 680 ohms, 5%, 1/4W		RC07GF681J
R30,44,51,77	RESISTOR, Film, 4990 ohms, 1%, 1/8W		RN55D4991F

REF. DESIGN.	DESCRIPTION	MFR.	DRAWING/ PART NO.
R31,33,35,55, 59,61	RESISTOR, Film, 9090 ohms, 1%, 1/8W		RN55D9091F
R32,34,57,60	RESISTOR, Variable, Film 2K	Amph	3811P-202
R38,40,41	RESISTOR, Composition, 30K, 5%, 1/4W		RC07GF303J
R39	RESISTOR, Composition, 1K, 5%, 1/4W		RC07GF102J
R46	RESISTOR, Composition, 2K, 5%, 1/4W		RC07GF202J
R42,43,45,50, 53,54,56,58, 74	RESISTOR, Film, 10K, 1%, 1/8W		RN55D1002J
R47	RESISTOR, Composition, 8.2K, 5%, 1/4W		RC07GF822J
R62,63	RESISTOR, Film, 1K, 1%, 1/8W		RN55D1001J
R64,65	RESISTOR, Composition, 120 ohms, 5%, 1/4W		RC07GF121
R66	RESISTOR, Composition, 7.5K, 5%, 1/4W		RC07GF752J
R69	RESISTOR, Composition, 56k, 5%, 1/4W		RC07GF563J
R72	RESISTOR, Film, 1210 ohms, 1%, 1/8W		RN55D1211F
R75	RESISTOR, Film, 7150 ohms, 1%, 1/8W		RN55D7151F
R76	RESISTOR, Variable, Film, 1K	Amph	3811-102
U1,4,5,6,7,8	INTEGRATED CIRCUIT		1458
U2.10	INTEGRATED CIRCUIT	Nat	LM308AH
U3	INTEGRATED CIRCUIT	Nat	LM339
U9	INTEGRATED CIRCUIT	Nat	LH0002CH

REF. DESIGN.	DESCRIPTION	MFR.	DRAWING/ PART NO.
A12B5, REMOTE BAND/MODE BOARD			
C1,2,3	CAPACITOR, .1uf, 100V		8121-100-651-104M
D1,2	DIODE		IN4148
R1	RESISTOR, 1M, 5%, 1/8W		RC05GF105J
R2 - 21	RESISTOR, 100K, 5%, 1/8W		RC05GF104J
U1	INNTEGRATED CIRCUIT		HM6611
U2	INNTEGRATED CIRCUIT		MC15503B
U3	INNTEGRATED CIRCUIT		74C157
U4	INNTEGRATED CIRCUIT		74C04
U5,7,9	INNTEGRATED CIRCUIT		MC14560B
U6,8,10	INNTEGRATED CIRCUIT		MC14561B
XU1	SOCKET, 16 Pin	EMC	7016-265-5
A12B6, REMOTE CONTROL BOARD			
C12,3	CAPACITOR, .1uf, 100V		8121-100-651-104M
D1 - 8	DIODE		IN4148
R1 - 16, 18 - 26,29, 32,33,36 - 43	RESISTOR, 100K, 5%, 1/8W		RC05GF104J
R17,27,28,30, 31,34,35	RESISTOR, 10K, 5%, 1/8W		RC05GF103J
Q1 - 6,8,10, 12 - 17	TRANSISTOR		2N3904
Q7,9,11	TRANSISTOR		2N3906

REF. DESIGN.	DESCRIPTION	MFR.	DRAWING/ PART NO.
U1,3,5	INTEGRATED CIRCUIT		74C157
U2,7	INTEGRATED CIRCUIT		74C04
U4,6	INTEGRATED CIRCUIT		74C42
XQ1 - 16	SPREADER		EXP002

REF. DESIGN.	DESCRIPTION	MFR.	DRAWING/ PART NO.
A13, 5V REGULATOR			
C1	CAPACITOR, Ceramic, .01uf, 100V	Sprague	TG-S10
C2	CAPACITOR, Tantalum, 22uf, 10%, 10V	Kemet	T310B226K010AS
Q1	TRANSISTOR, Silicon, PNP	Mot	2N5986
Q2	TRANSISTOR, Silicon, NPN	Mot	2N2218
R1,2	RESISTOR, Composition, 4.7K, 5%, 1/4W		RC07GF472J
R3	RESISTOR, Composition, 100K, 5%, 1/4W		RC07GF104J
R4	RESISTOR, Composition, 390 ohms, 5%, 1/4W		RC07GF102J
R5	RESISTOR, Composition, 1K, 5%, 1/4W		RC07GF391J
R6	RESISTOR, Wirewound, 6.8 ohms, 1.5W		995-1A-6.8 ohms
R1,2	RESISTOR, Composition, 2.2k, 5%, 1/4W		RC07GF222J
R8	RESISTOR, Variable, 1K, 5%, 1/4W		PAR-1K
U1	INTEGRATED CIRCUIT, 3T Regulator	Nat	78L26C
U2	INTEGRATED CIRCUIT, Dual OP AMP		1458

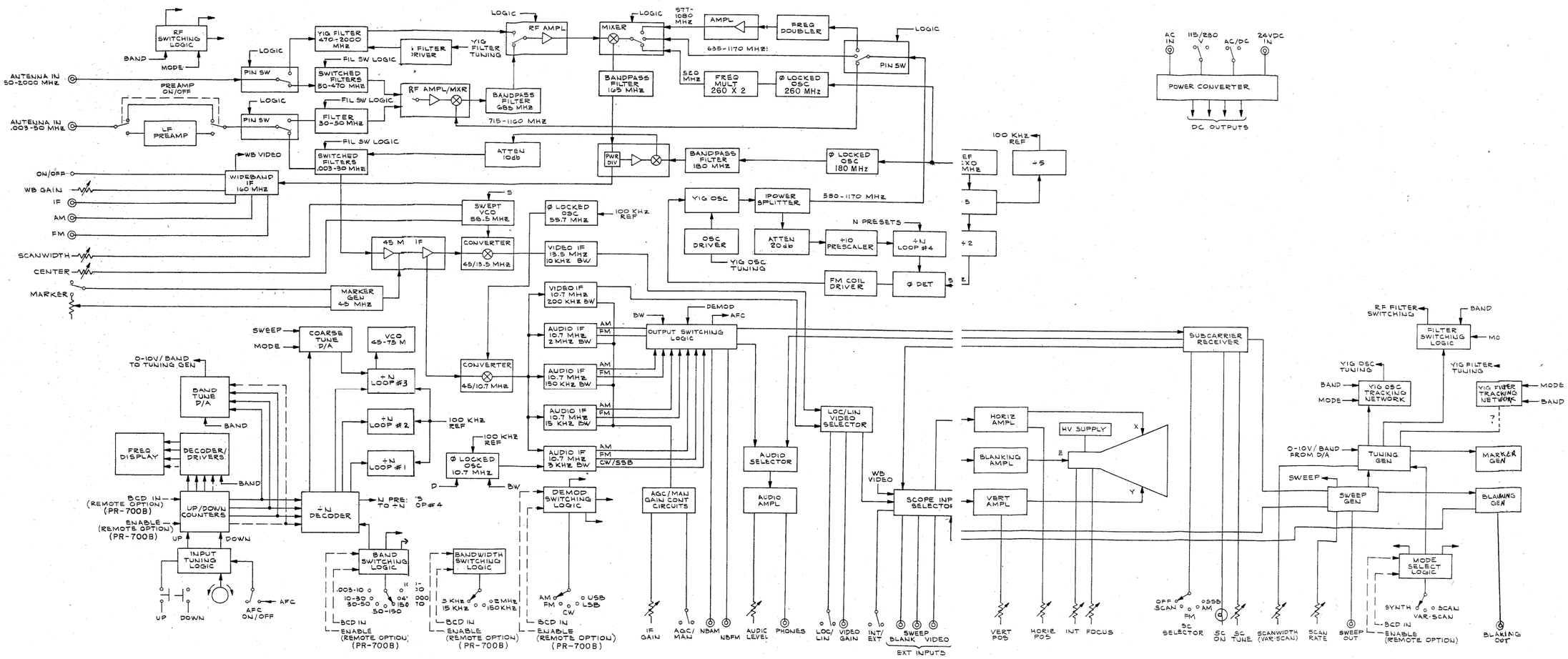

PR-700A (S/N 126 & UP)
PR-700B
AI-RECEIVER
FUNCTIONAL BLOCK DIAGRAM

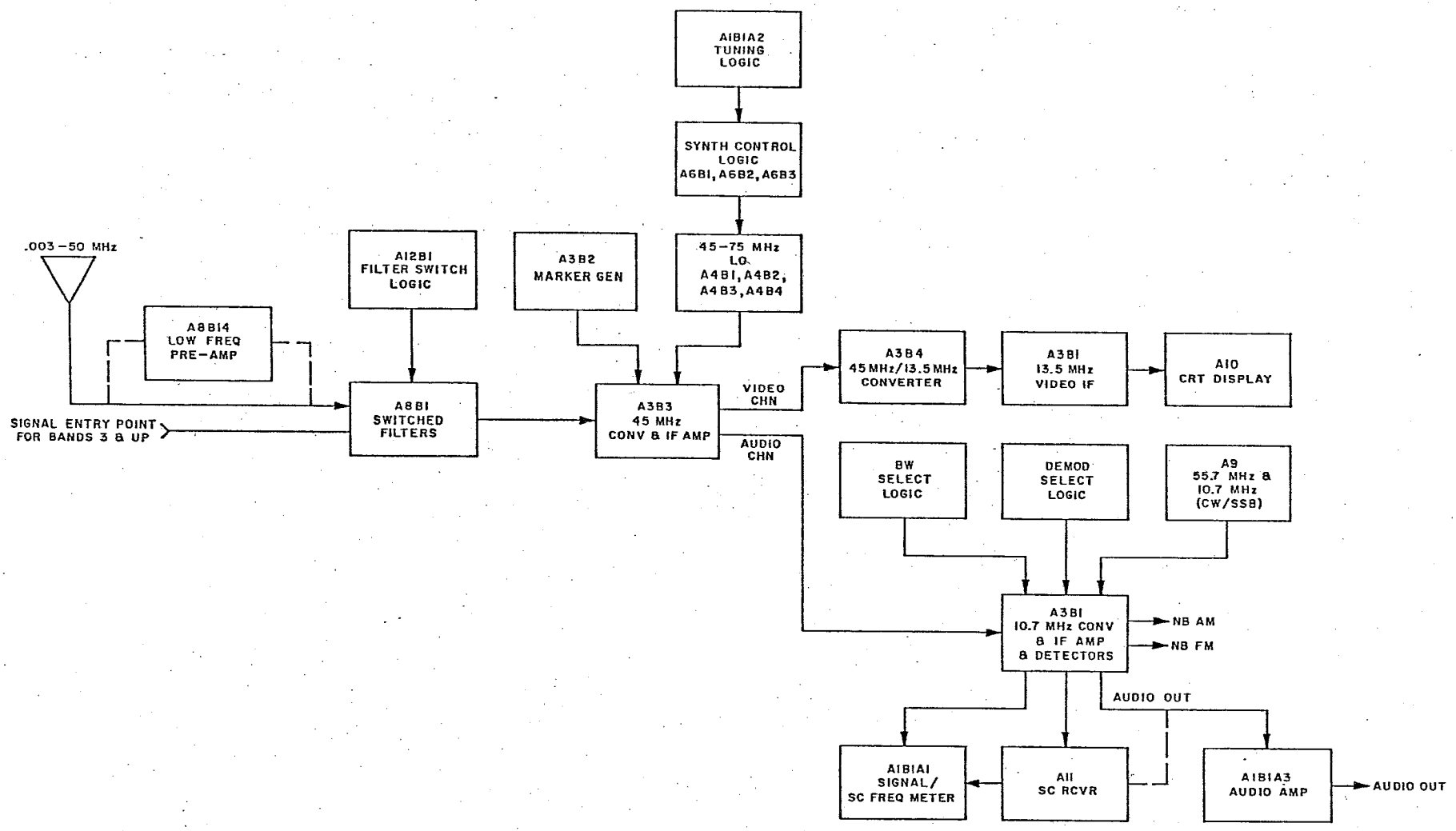

PR-700A
SIMPLIFIED BLOCK DIAGRAM
BANDS 1 & 2

81B10-005

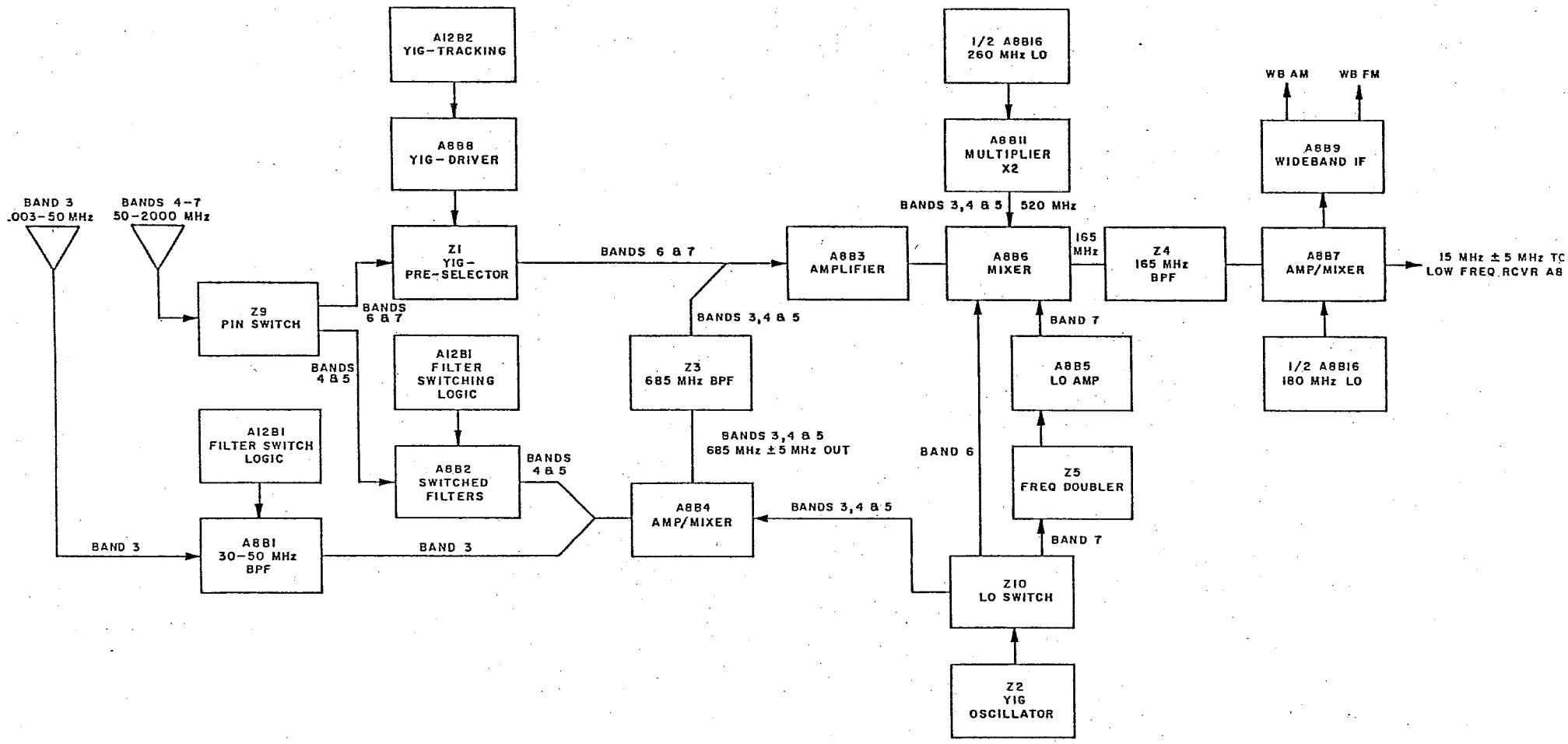

PR-700A
SIMPLIFIED BLOCK DIAGRAM
BANDS 3-7
81B10-006

UPDATED 6-15-81
B REV PER CO NO 604 4-9-86

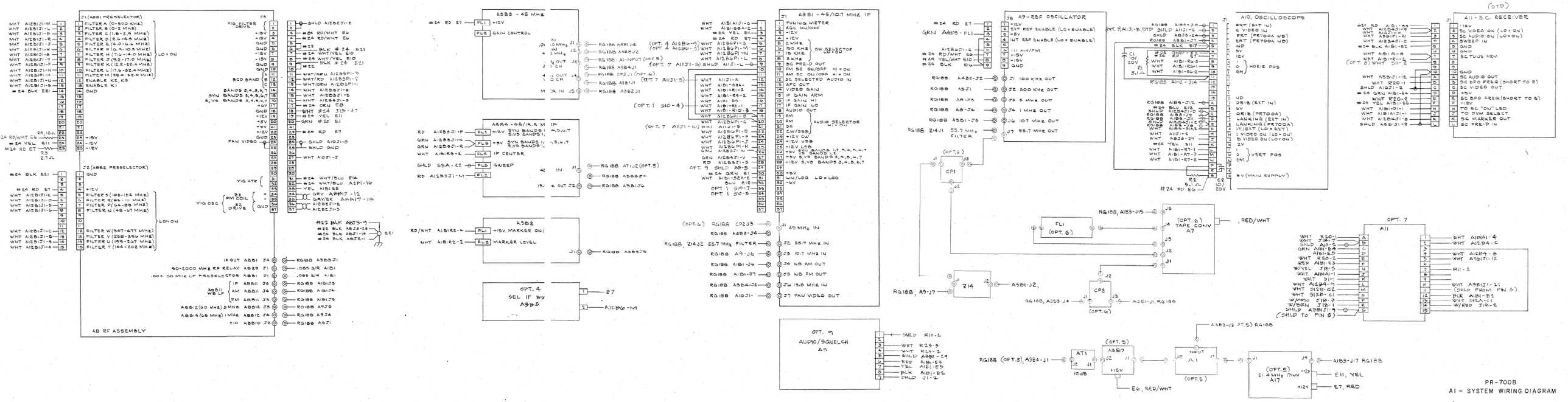

PR-700B
A1 - SYSTEM WIRING DIAGRAM

SHEET 1 OF 4

81R10-1002

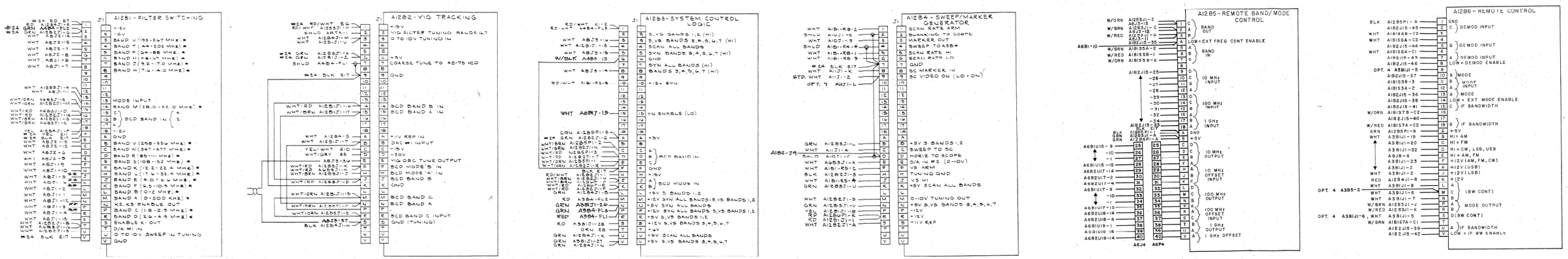

PR-700B
AI- SYSTEM WIRING DIAGRAM

SHEET 2 OF 4

81R10-1002

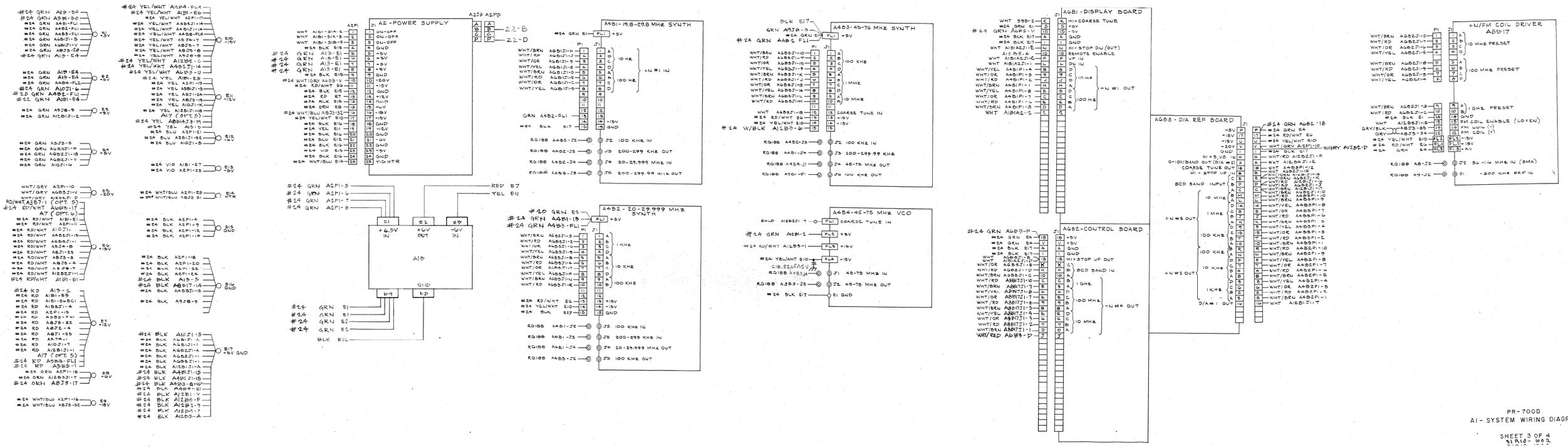
A2 - POWER SUPPLY
A4B1 - 19.8-29.8 MHz SYNTH
A4B3 - 45-75 MHz SYNTH
A4B4 - 45-75 MHz VCO
A4B2 - 20-29.999 MHz SYNTH
A6B1 - DISPLAY BOARD
A6B3 - D/A REF BOARD
A6B2 - CONTROL BOARD
+N/FM COIL DRIVER A8B17
A12 - 6.5V IN
+6V OUT
-6V IN
GND
RG188 A4B2-J2 100 KHz IN
RG188 A4B2-J3 200-299 KHz OUT
RG188 A4B2-J4 20-29.999 MHz IN
RG188 A4B2-J5 200-299.99 KHz OUT
RG188 A4B3-J2 100 KHz IN
RG188 A4B3-J3 200-299.99 KHz
RG188 A4B3-J4 45-75 MHz OUT
RG188 A7B1-J1 100 KHz OUT
RG188 A4B4-J1 45-75 MHz OUT
RG188 A3B3-J2 45-75 MHz IN
RG188 A8-J2 50-116 MHz IN (SMA)
RG188 A9-J2 -300 KHz REF IN
PR-700D
A1- SYSTEM WIRING DIAGRAM
SHEET 3 OF 4
31A10-1002

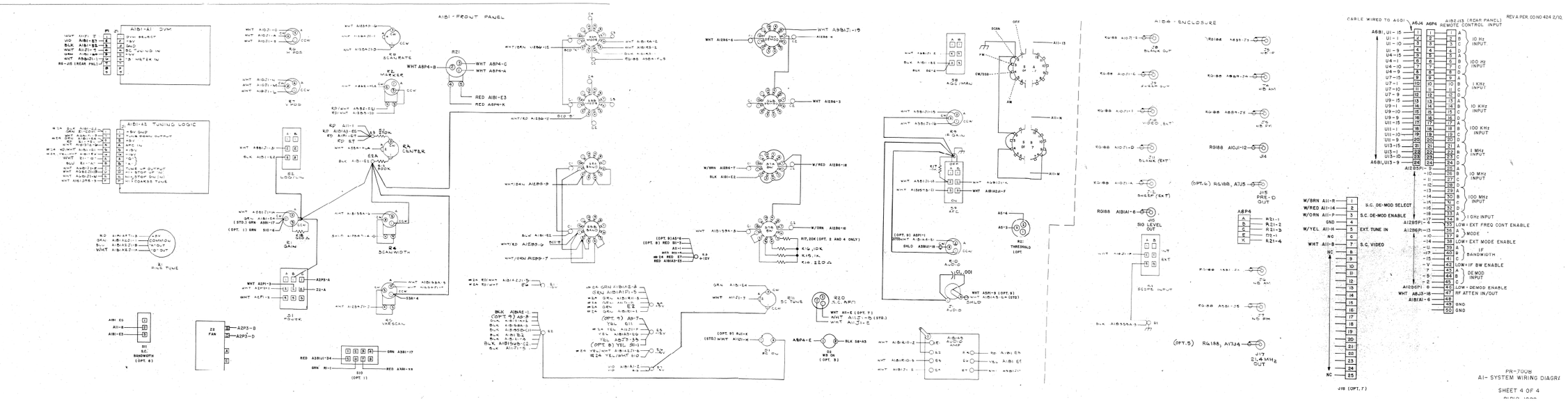
A1B1-FRONT PANEL
A1B1-A1 DVM
A1B1-A3 TUNING LOGIC
A1B4-ENCLOSURE
CABLE WIRED TO A6D1
A6J4 A6P4
A1B2J13 (REAR PANEL) REMOTE CONTROL INPUT
REV A PER CO NO 424 2/10.
A6B1, U1-15
A6B1, U13-9
A12B5P1-9
A12B5P1-6
A12B6P1-13
A1B1A1-6
J16 (OPT. 7)
S.C. DE-MOD SELECT
S.C. DE-MOD ENABLE
EXT. TUNE IN
S.C. VIDEO
10 Hz INPUT
100 Hz INPUT
1 KHz INPUT
10 KHz INPUT
100 KHz INPUT
1 MHz INPUT
10 MHz INPUT
100 MHz INPUT
1 GHz INPUT
LOW = EXT FREQ CONT ENABLE
MODE
LOW = EXT MODE ENABLE
IF BANDWIDTH
LOW = IF BW ENABLE
DE MOD INPUT
LOW = DEMOD ENABLE
RF ATTEN IN/OUT
GND
PR-7008
A1- SYSTEM WIRING DIAGRA
SHEET 4 OF 4

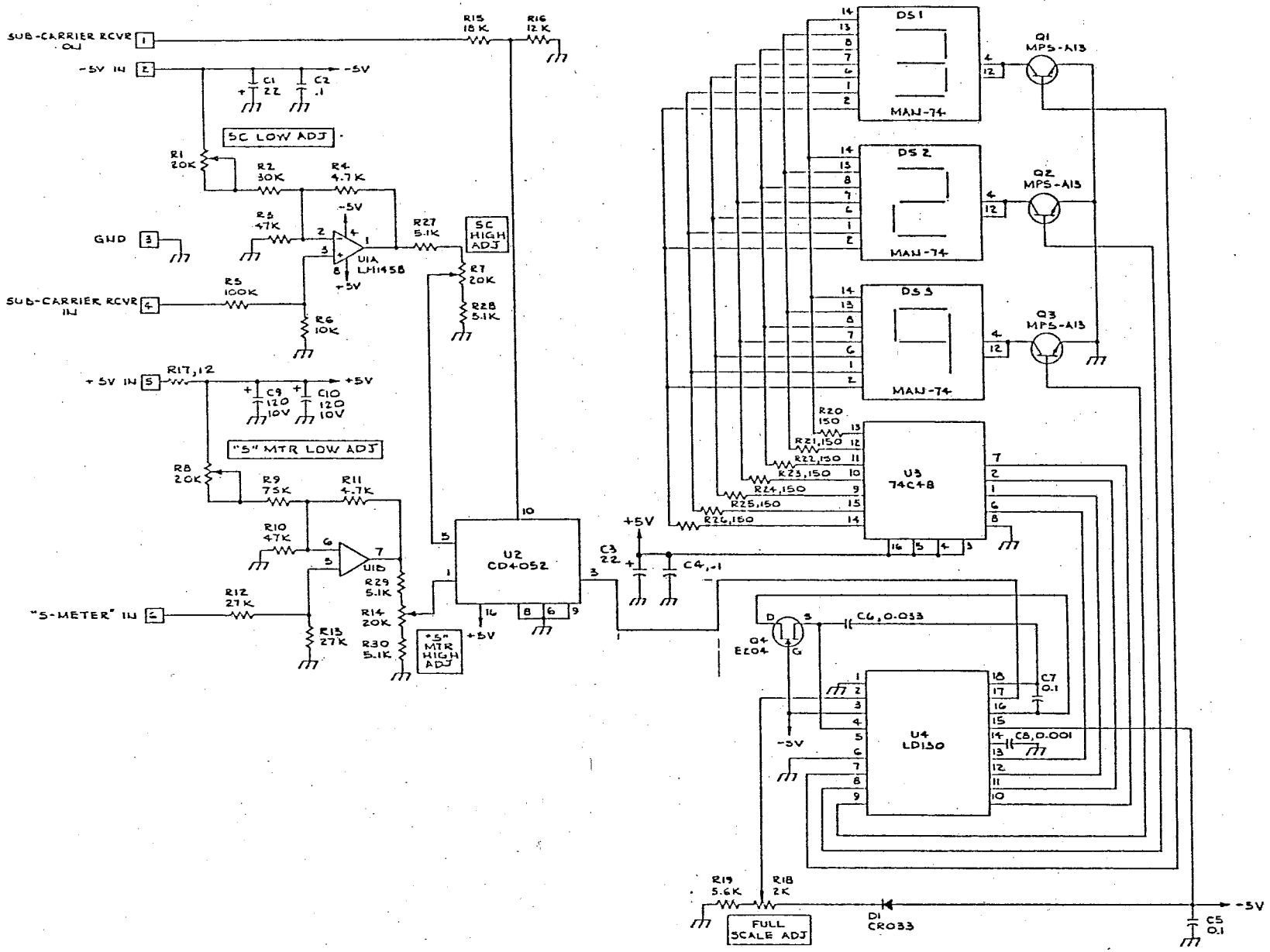

UNLESS OTHERWISE SPECIFIED:
ALL RESISTANCES ARE IN OHMS
ALL RESISTORS ARE 1/4 W
ALL CAPACITORS ARE IN MICROFARAD

REF DESIGNATIONS	
LAST	NOT USED
R30	
C10	
U4	
Q4	
D1	
DS3	

PR-700A
AIBIAI - SCHEMATIC,
DVM/METER AMPLIFIER

81D111-011

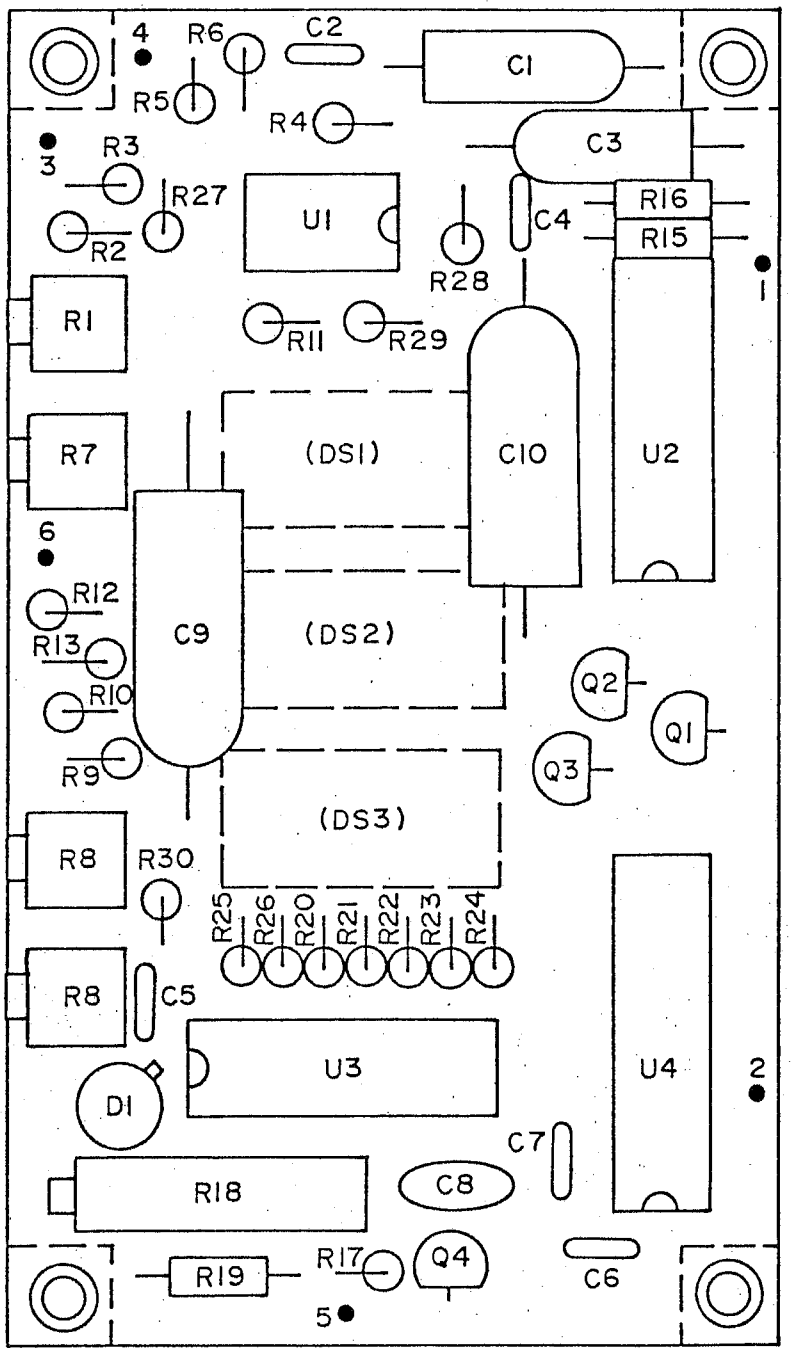

PR-700A
A1B1A1-COMPONENT LOCATION,
DVM/METER AMPLIFIER
81A111-364

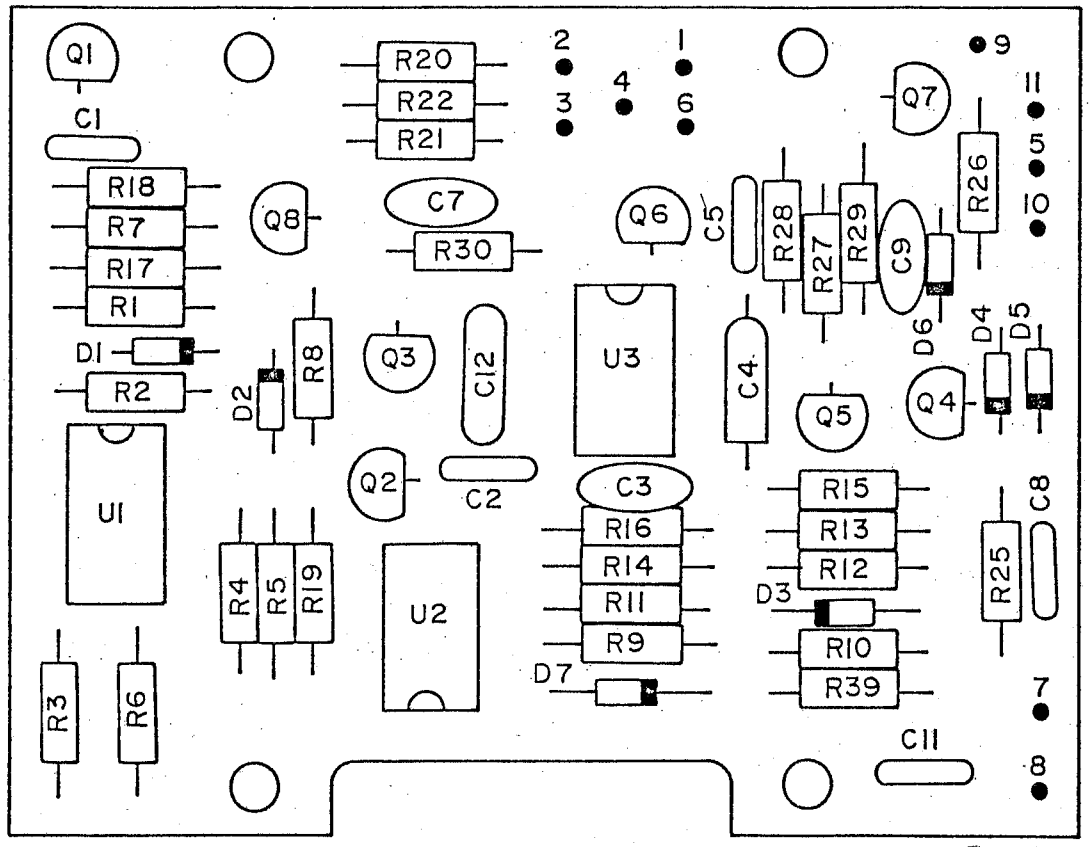

(USED ON UNITS THRU S/N 174)

PR-700A & B
A1B1A2-1 - COMPONENT LOCATION,
TUNING LOGIC
81A112-382

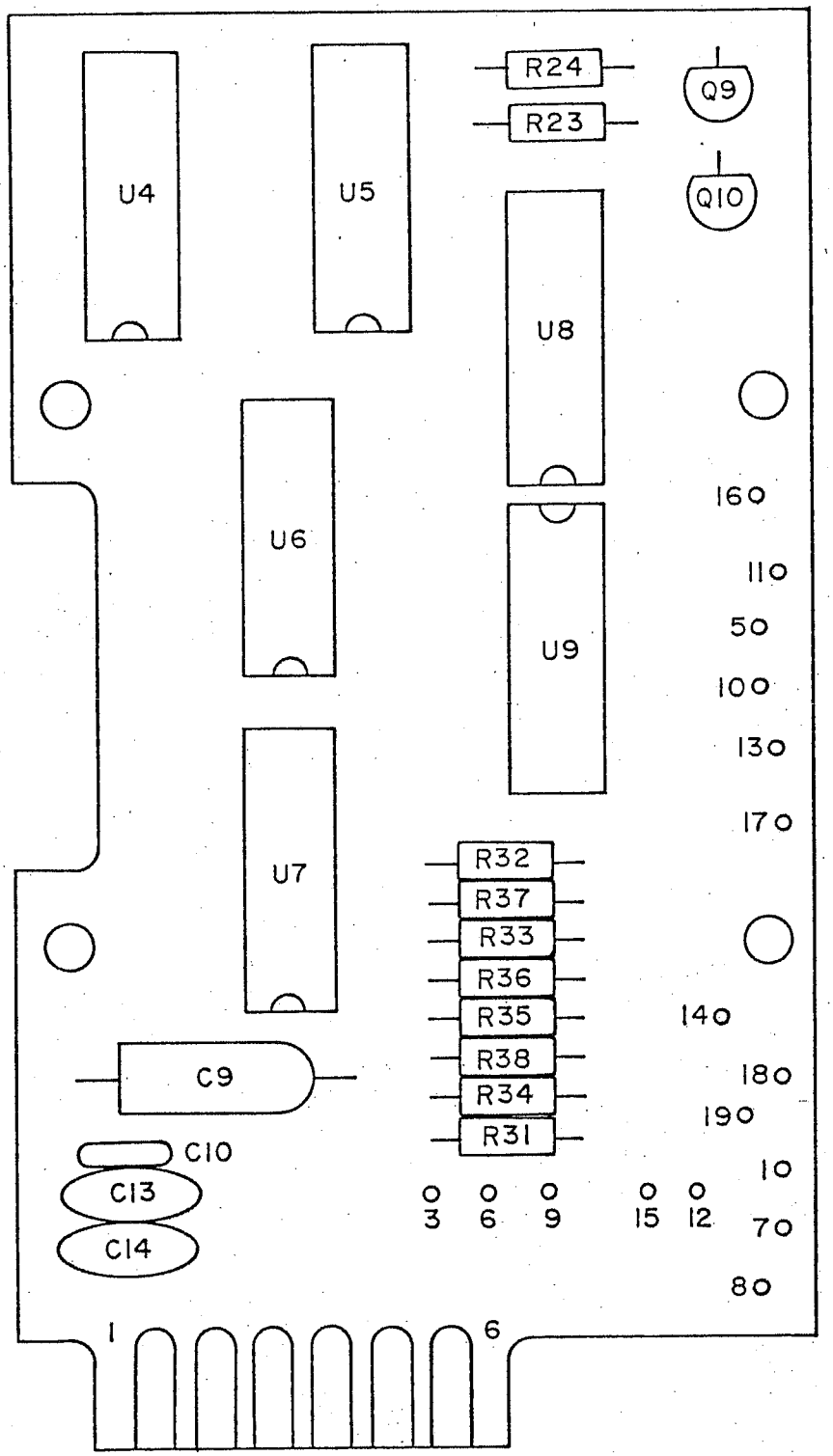

(USED ON UNITS THRU S/N 174)

PR-700A & B
A1B1A2-2 COMPONENT LOCATION,
TUNING LOGIC

81A112-383

EFF. C.O. 219 6-11-80 PS
REV. B C.O. 384 7-7-82 WMW

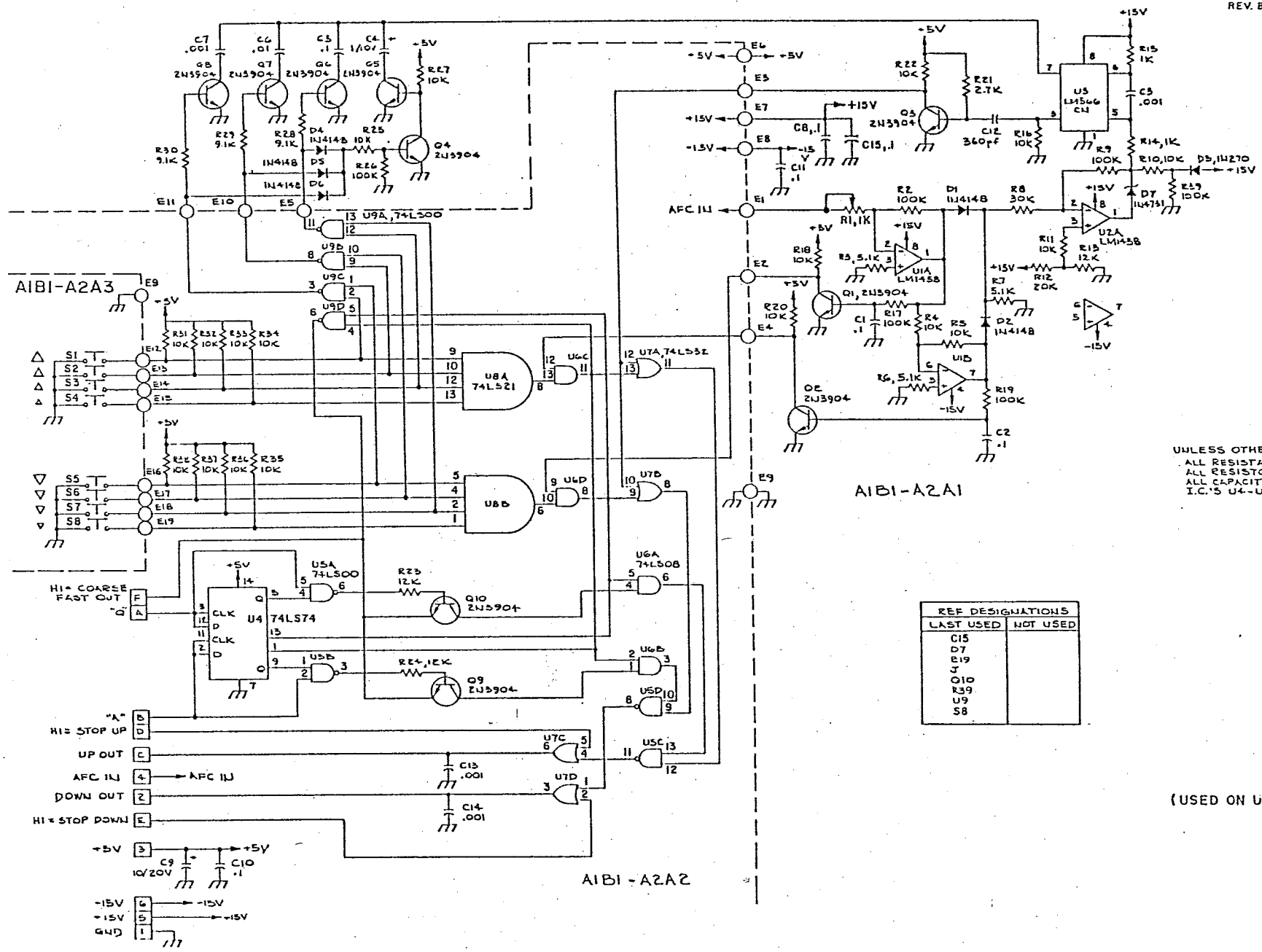

UNLESS OTHERWISE SPECIFIED:
ALL RESISTANCES ARE IN OHMS
ALL RESISTORS ARE 1/8 WATT
ALL CAPACITORS ARE IN MICROFARADS
I.C.'S U4-U9 : PIN 7 = GND & PIN 14 = +5V

REF DESIGNATIONS	
LAST USED	NOT USED
C15	
D7	
R19	
J	
Q10	
R39	
U9	
S8	

(USED ON UNITS S/N 175 & UP)

PR-700A
A1B1A2 - SCHEMATIC,
TUNING LOGIC

81D112-027-1

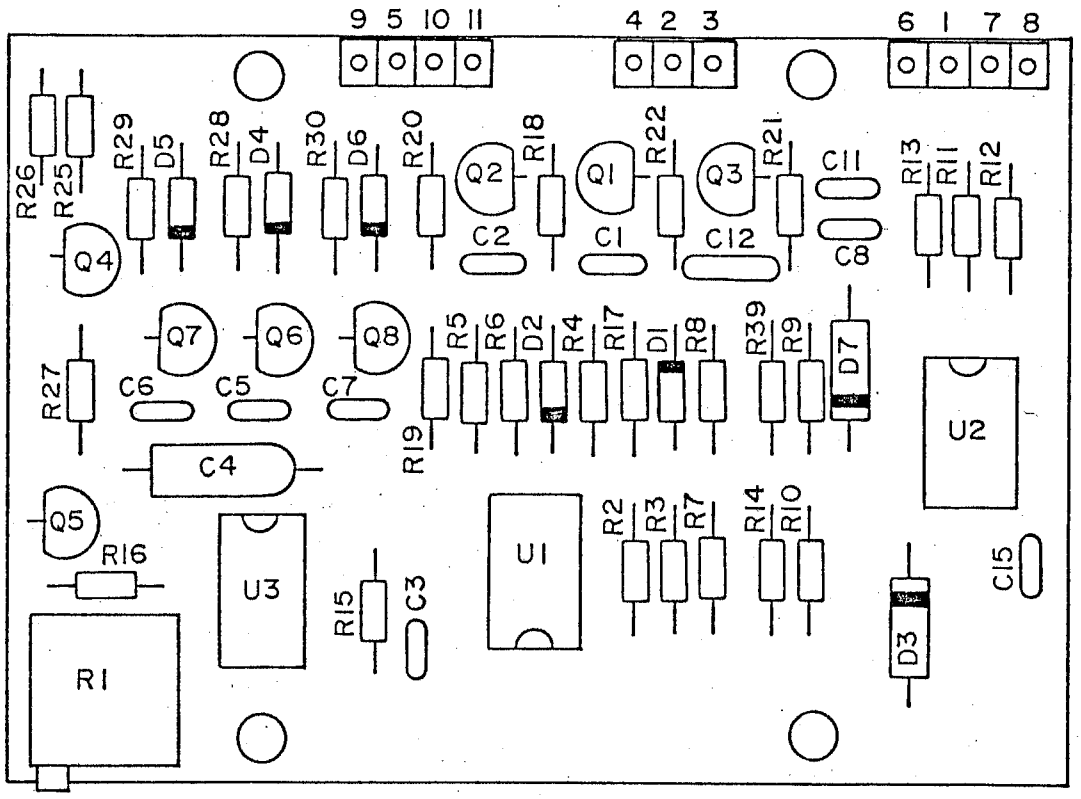

(USED ON S/N 175 & UP)

PR-700A
A1B1A2-1 – COMPONENT LOCATION,
TUNING LOGIC
81A112-382

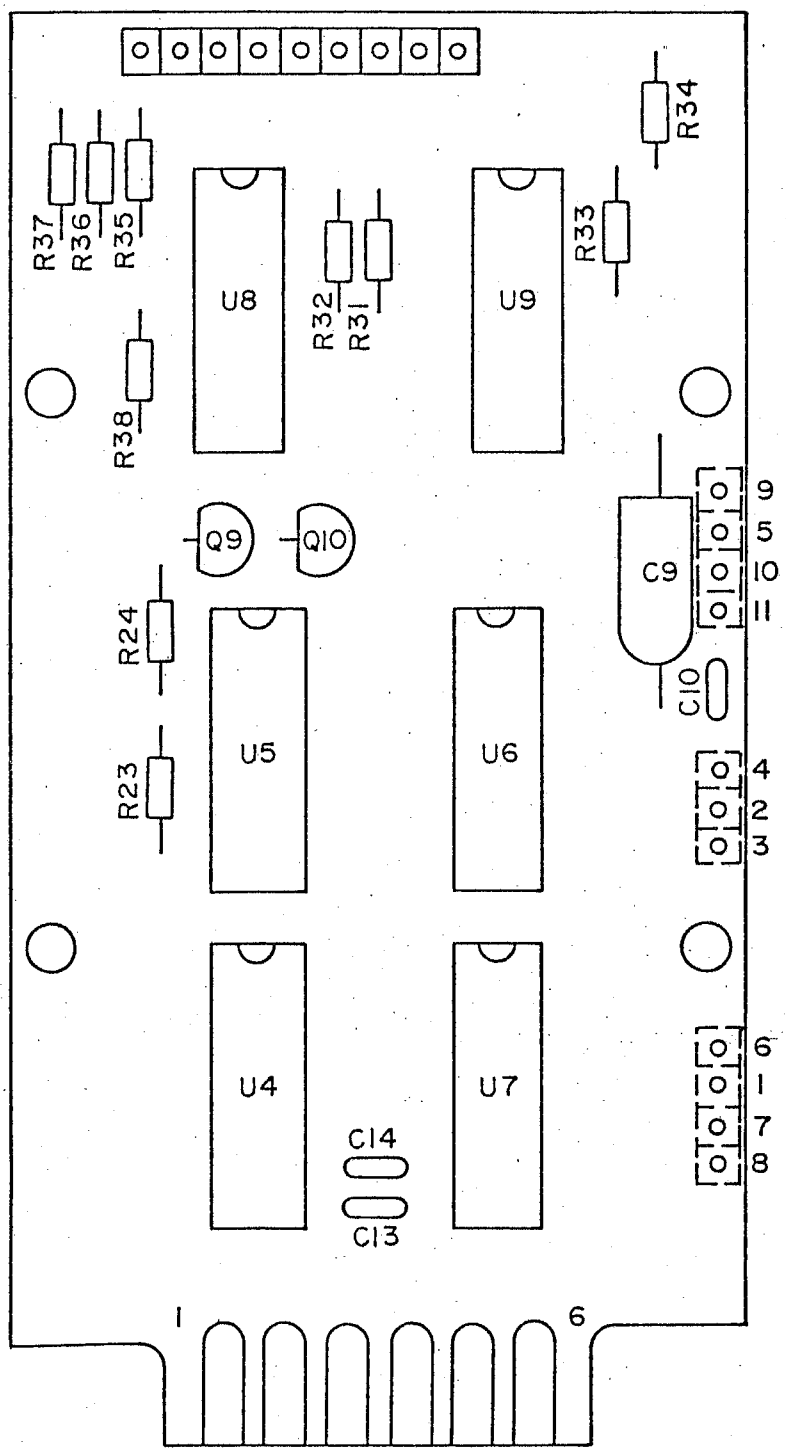

(USED ON S/N 175 & UP)

PR-700A
AIBIA2-2 – COMPONENT LOCATION,
TUNING LOGIC

81A112-383

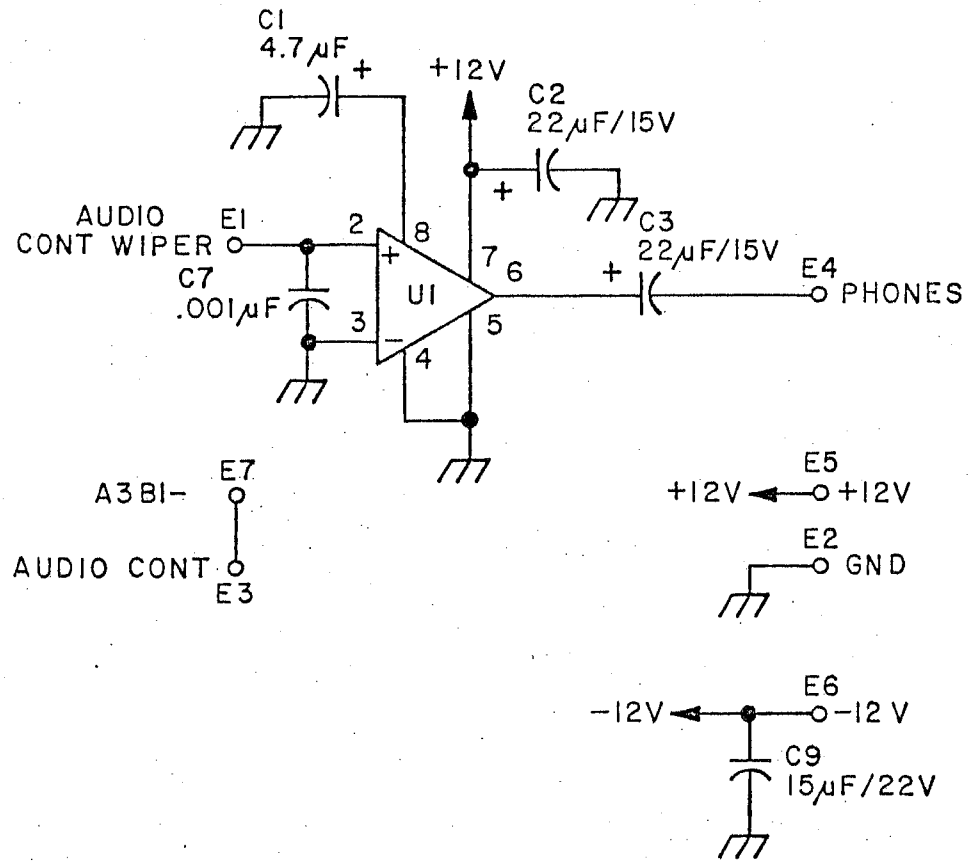

REF DESIGNATIONS	
LAST USED	NOT USED
C9 E7 U1	C4, 5, 6, 8.

(USED ON S/N 126 & UP)

PR-700A
A1B1A3-SCHEMATIC,
AUDIO ASSEMBLY

81A113-026-1

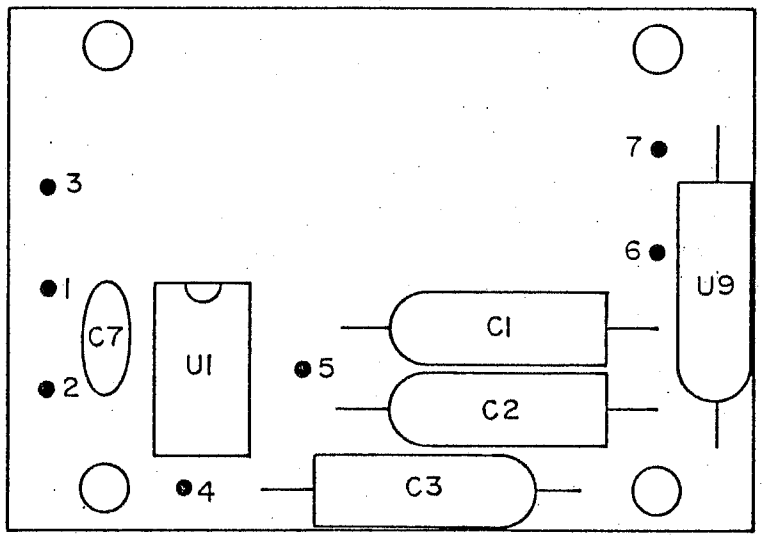

(USED ON S/N 126 & UP)

PR-700A
A1B1A3 - COMPONENT LOCATION,
AUDIO ASSEMBLY
81A113-359

REV. B PER CO. NO. 435 7/18/83 JFF
REV. C PER. CO NO. 439 8/19/83 WMW
REV. D PER CO NO. 549 6/20/85 LWB
REV E PER CO NO. 545 7/23/85 WWW

REF DESIGNATIONS	
LAST USED	NOT USED
C24	
D21	
D23	
F2	
FL1	
J3	
L5	
Q14	
R67	
U13	
U15	
U12	

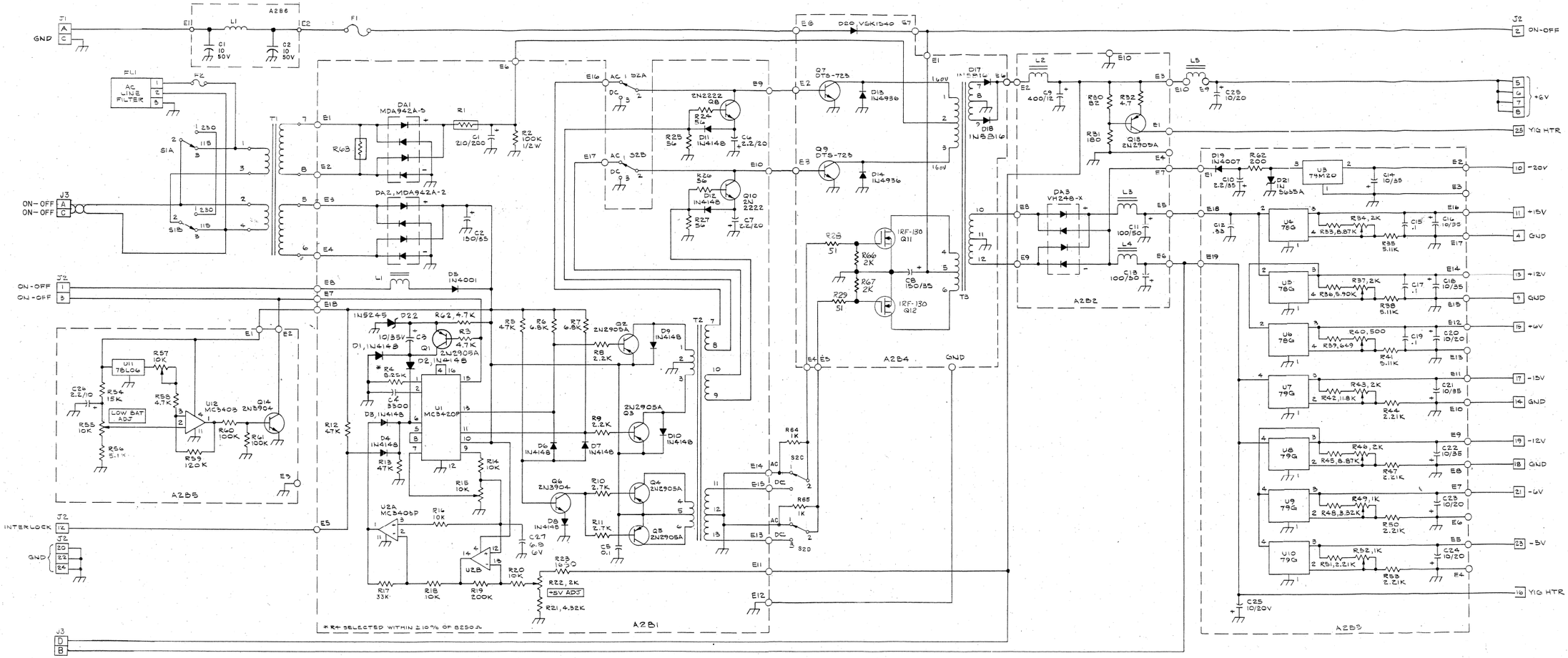

UNLESS OTHERWISE SPECIFIED:
ALL RESISTANCES ARE Ω, OHMS
ALL RESISTORS ARE 1/4W.
ALL CAPACITORS ARE IN MICROFARADS

PR-700
A2 - SCHEMATIC,
POWER SUPPLY

81R20-042E

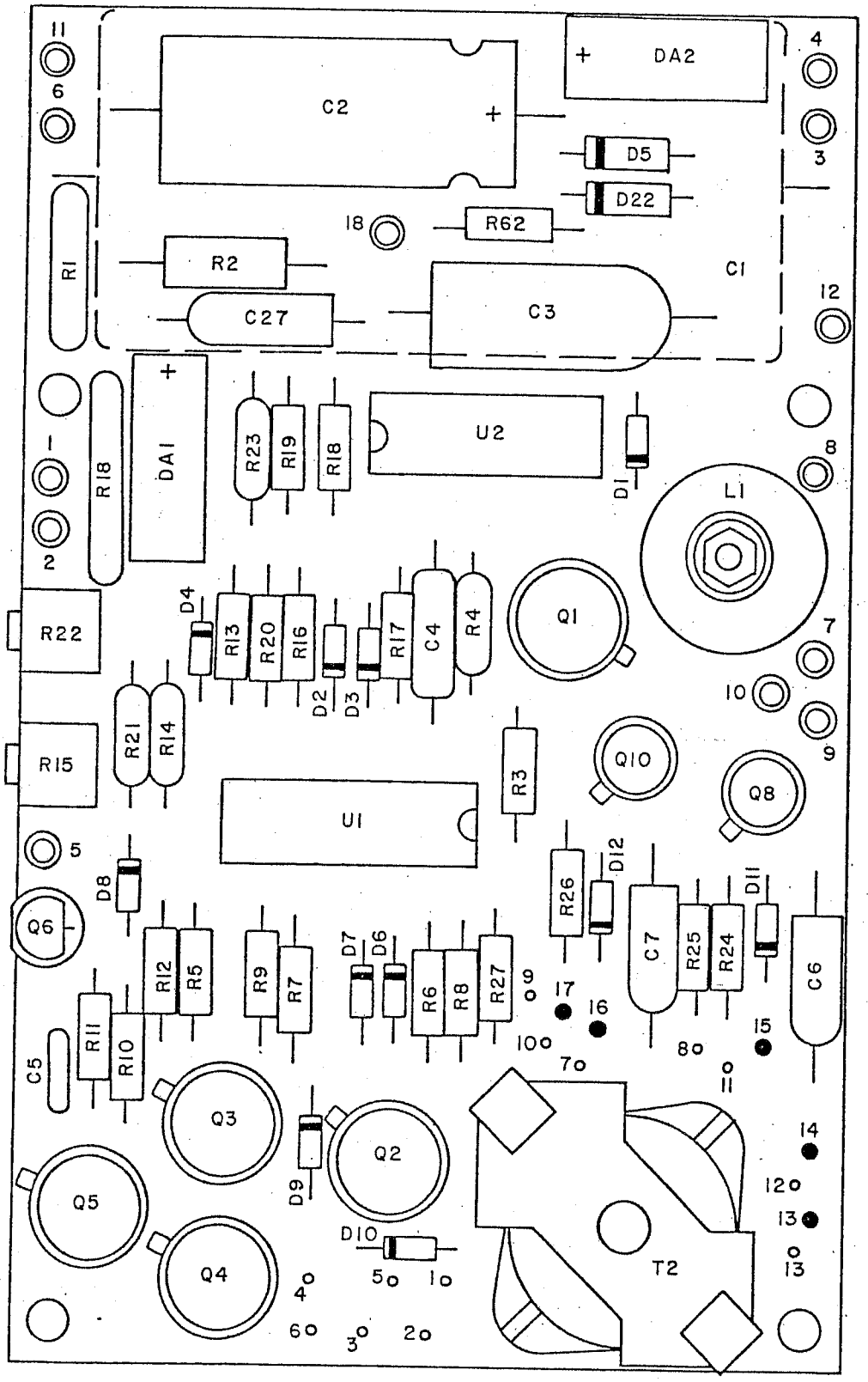

PR-700A
A2B1- COMPONENT LOCATION,
CONTROL CIRCUIT

81A21-366

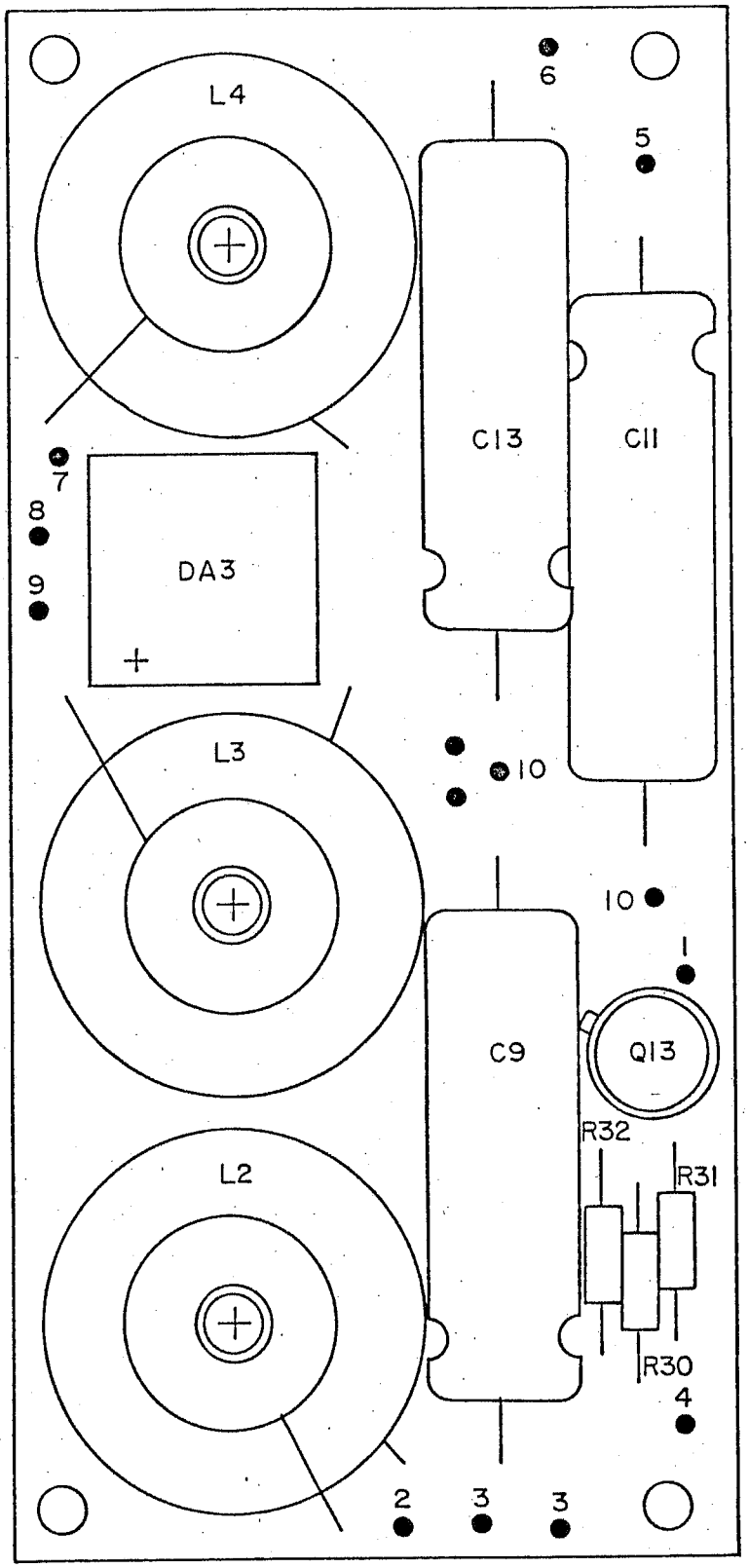

PR-700A
A2B2-COMPONENT LOCATION,
RECTIFIER ASSEMBLY

81A22-367

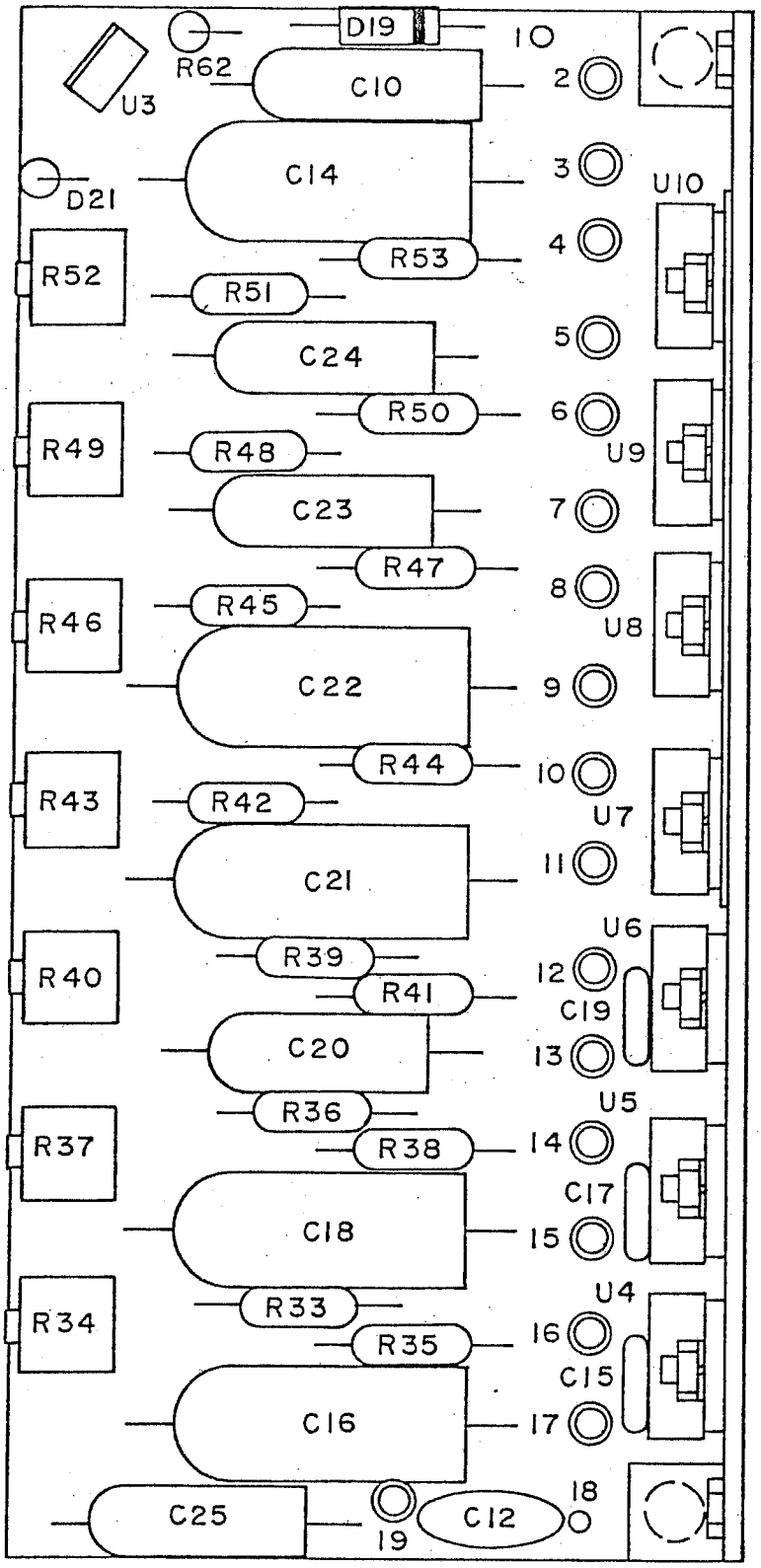

PR-700A
A2B3- COMPONENT LOCATION,
VOLTAGE REGULATOR

81A23-368

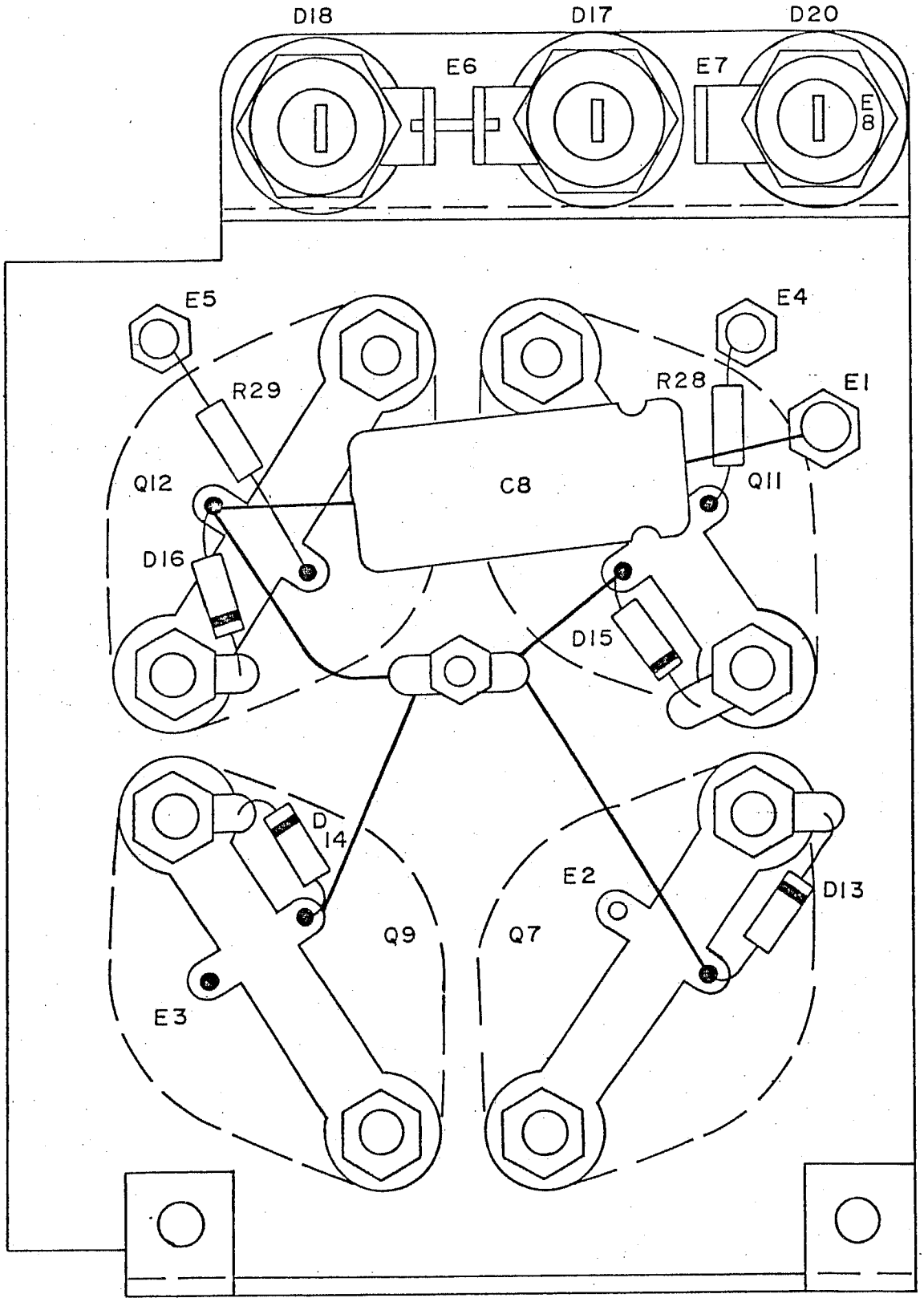

PR-700A
A2B4-COMPONENT LOCATION,
SWITCHING
81A24-373

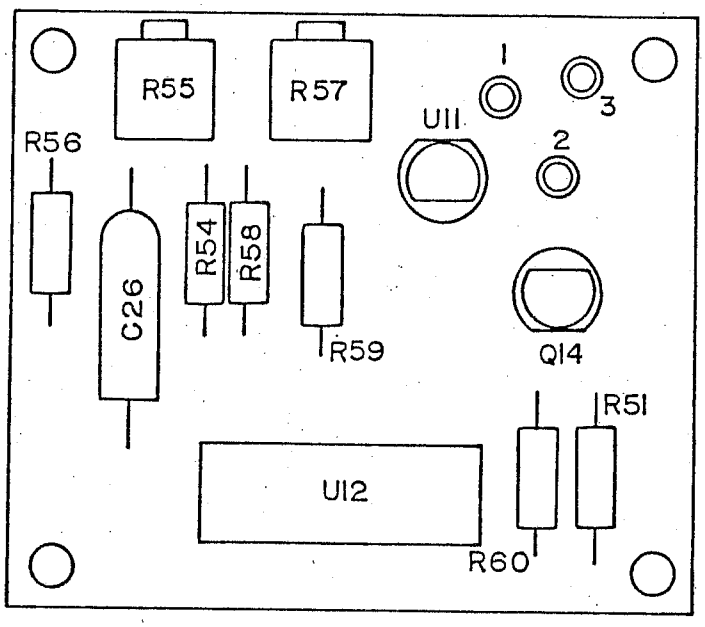

PR-700A
A2B5-COMPONENT LOCATION,
BATTERY CUTOUT

81A25-394

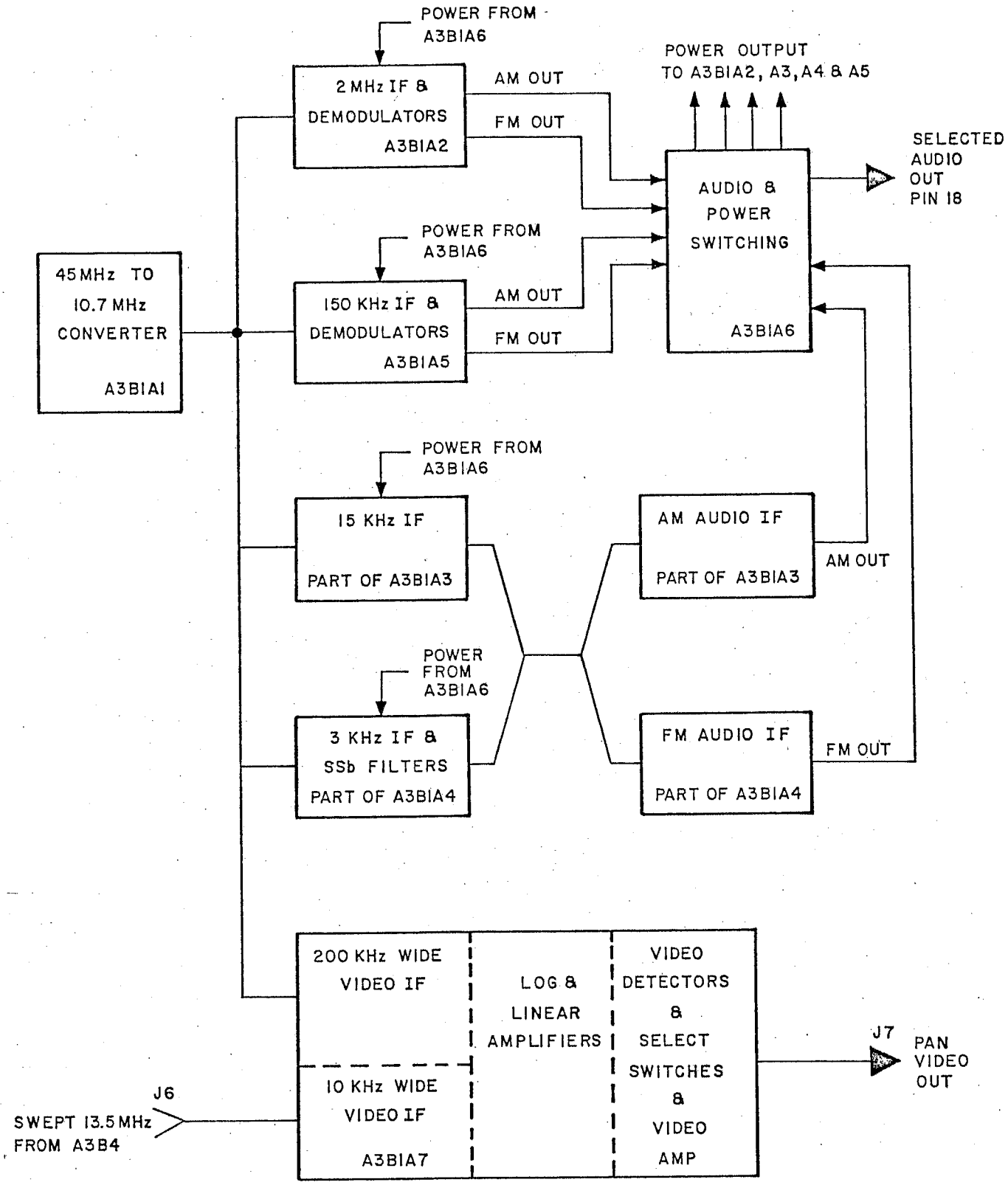

PR700
FIGURE A

A3B1 IF SIMPLIFIED BLOCK DIAGRAM
81A31-007

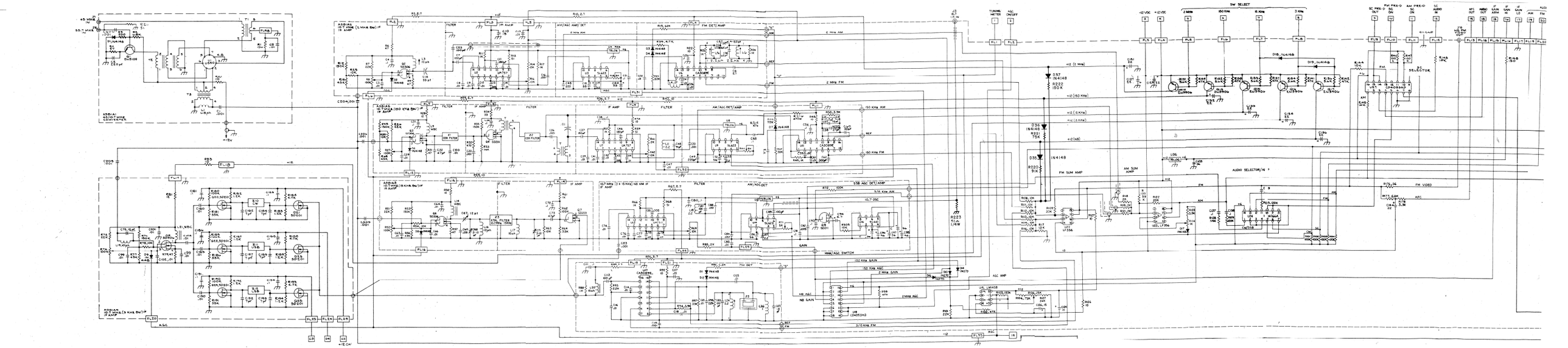
AM/AGC AMP/DET
FM DET/AMP
IF AMP
FILTER
AM/AGC DET/AMP
SSB AGC DET/AMP
FM SUM AMP
AM SUM AMP
AUDIO SELECTOR/AMP
SW SELECT
AGC AMP
MAN/AGC SWITCH
NB GAIN
FM VIDEO
AFC

EFF. C.O. 176/177 10/16/79 PS
EFF C.O. 87 1/7/80 PS

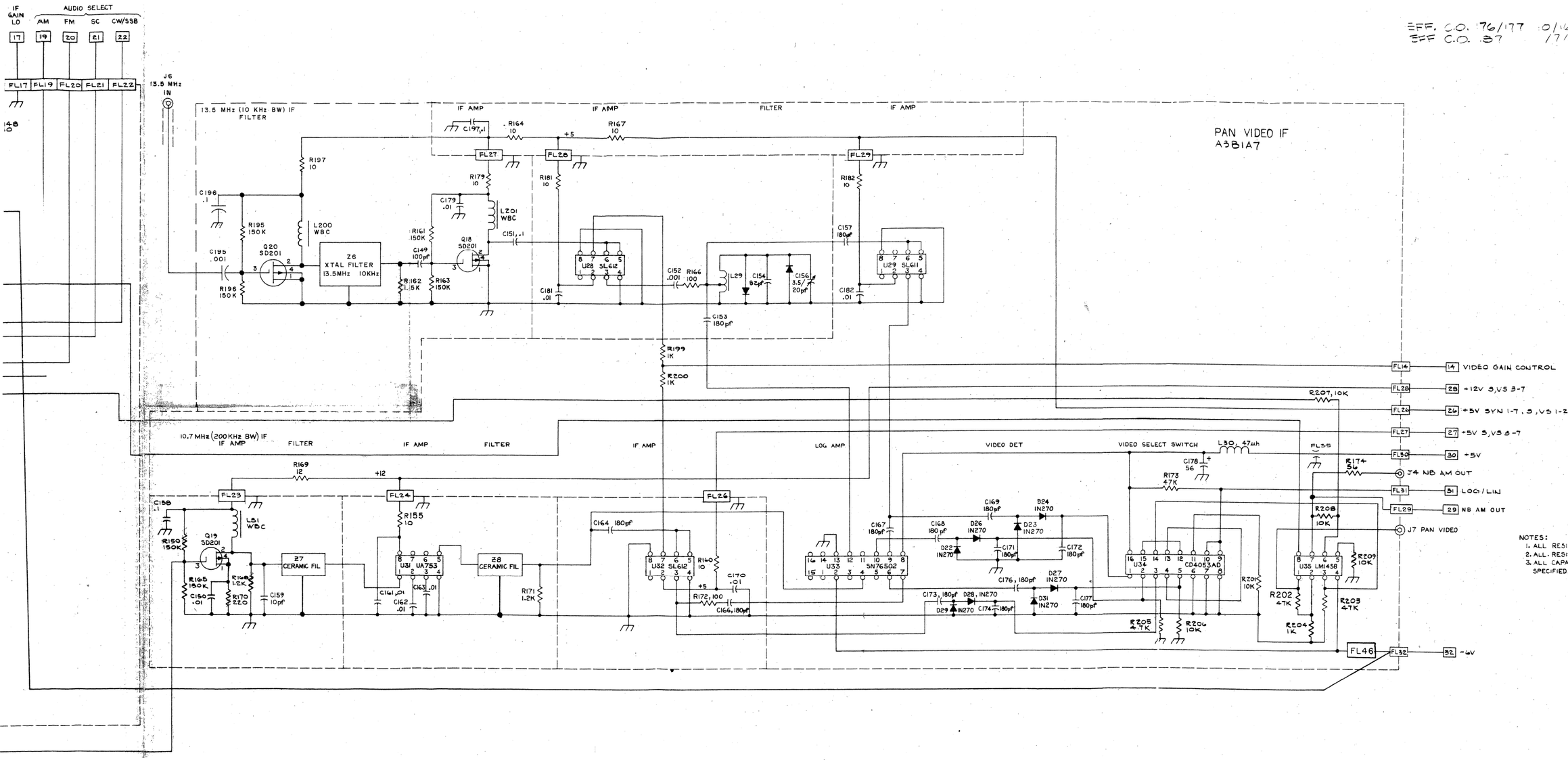

NOTES:
1. ALL RESISTORS 1/4W UNLESS OTHERWISE SPECIFIED.
2. ALL RESISTANCES IN OHMS.
3. ALL CAPACITANCES IN uF UNLESS OTHERWISE SPECIFIED.

(USED ON UNITS THRU S/N 174)

PR-700A
A3B1 - SCHEMATIC, IF

81R31-047

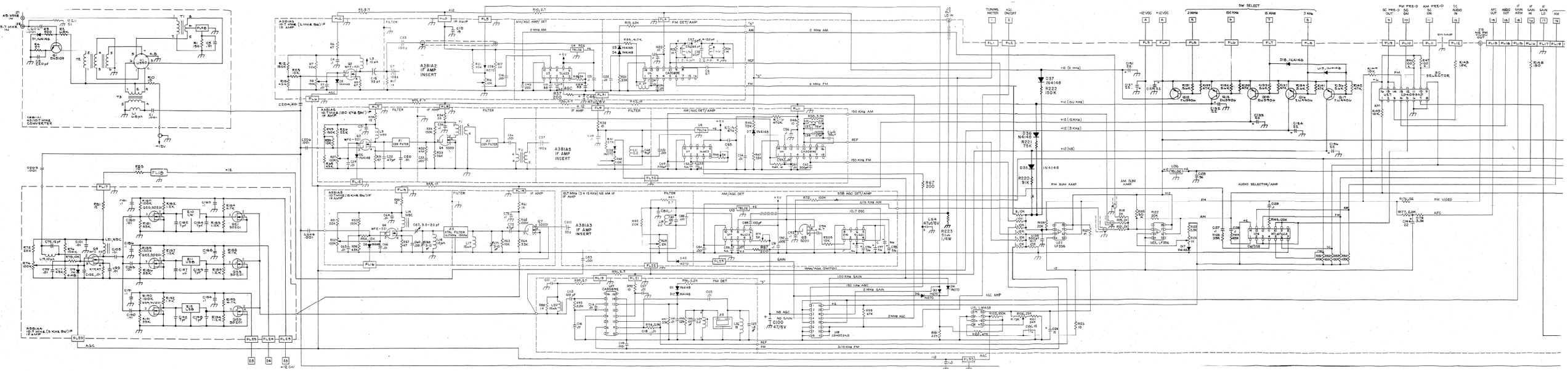
A3B1A1 45.1 MHz/10.7 MHz CONVERTER
A3B1A2 10.7 MHz (15 KHz BW) IF AMP
A3B1A2 IF AMP INSERT
A3B1A3 IF AMP INSERT
A3B1A5 IF AMP INSERT
A3B1A4 10.7 MHz (15 KHz BW) IF AMP
A3B1A6 10.7 MHz (150 KHz BW) IF AMP
A3B1A7 10.7 MHz (3 & 15 KHz) NB AM IF AMP
AM/AGC AMP/DET
FM DET/AMP
AM/AGC DET/AMP
SSB AGC DET/AMP
FM DET
AM/AGC SWITCH
AGC AMP
FM SUM AMP
AM SUM AMP
AUDIO SELECTOR/AMP
SW SELECT
AM PRE-D
FM PRE-D
SC PRE-D
SC SELECTOR
TUNING METER
AGC ON/OFF
FM VIDEO
AFC

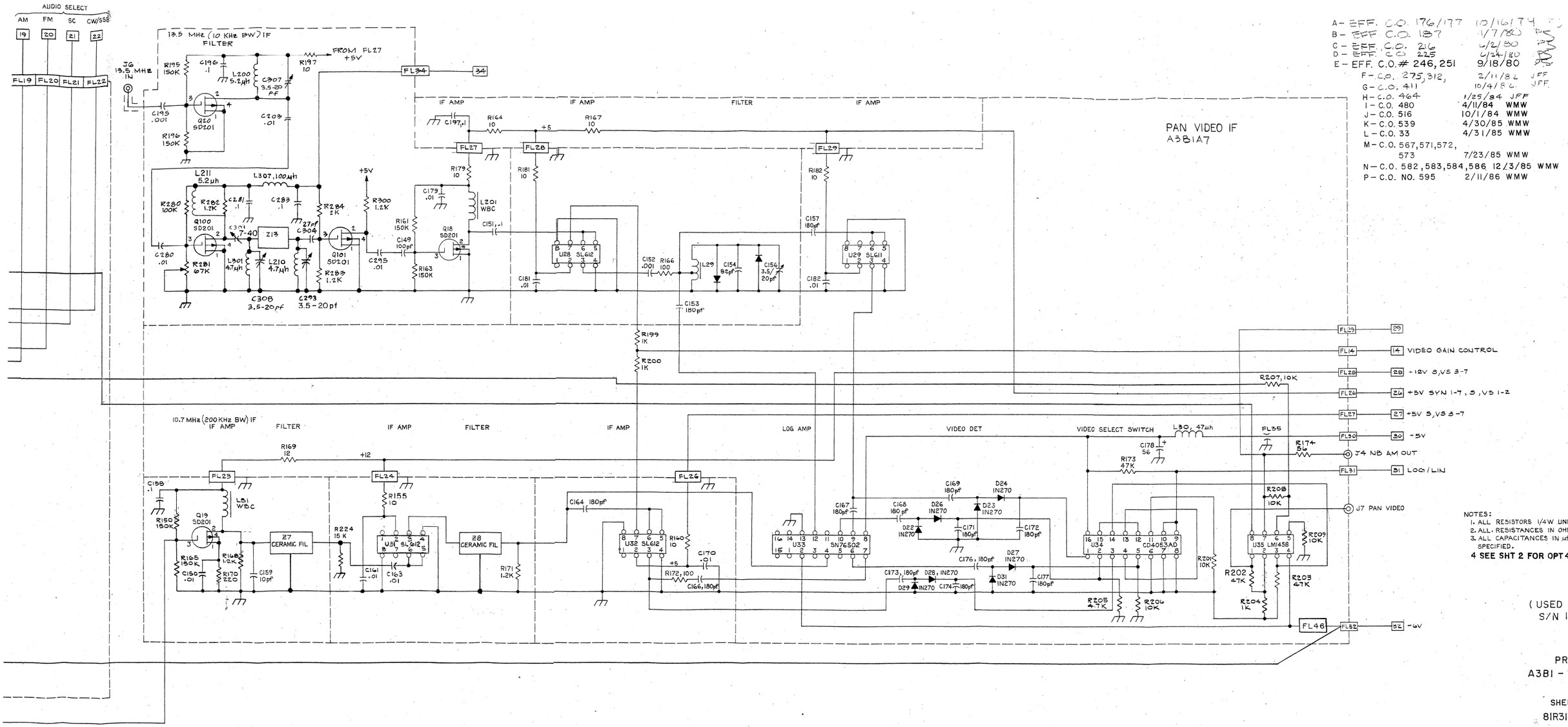

A- EFF. C.O. 176/177 10/16/74
B- EFF C.O. 187 1/7/80
C- EFF. C.O. 216 6/2/80
D- EFF. C.O 225 6/24/80
E- EFF. C.O.# 246, 251 9/18/80
F- C.O. 275, 312, 2/11/82 JFF
G- C.O. 411 10/4/82 JFF
H- C.O. 464 1/25/84 JFF
I- C.O. 480 4/11/84 WMW
J- C.O. 516 10/1/84 WMW
K- C.O. 539 4/30/85 WMW
L- C.O. 33 4/31/85 WMW
M- C.O. 567, 571, 572, 573 7/23/85 WMW
N- C.O. 582, 583, 584, 586 12/3/85 WMW
P- C.O. NO. 595 2/11/86 WMW

NOTES:
1. ALL RESISTORS 1/4W UNLESS OTHERWISE S
2. ALL RESISTANCES IN OHMS.
3. ALL CAPACITANCES IN µF UNLESS OTHERWI SPECIFIED.
4 SEE SHT 2 FOR OPT 4

(USED ON UNITS S/N 175 & UP)

PR-700A
A3B1 - SCHEMATIC
IF
SHEET 1 OF 3
81R31-047P-1

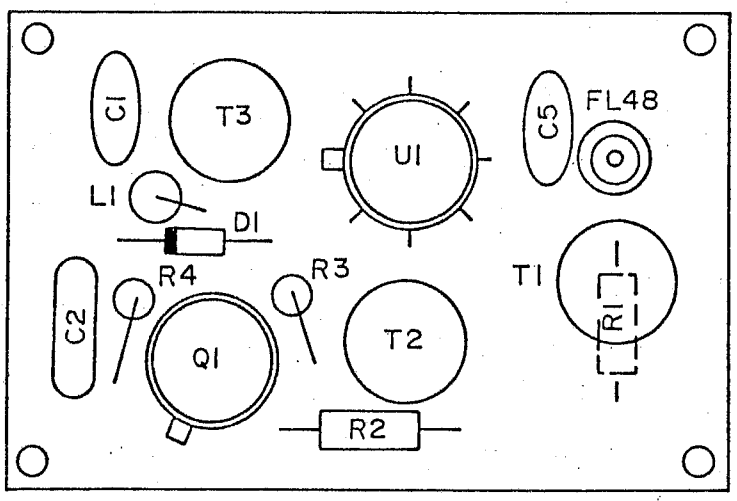

PR-700A
A3B1A1 - COMPONENT LOCATION,
CONVERTER

81A311-332

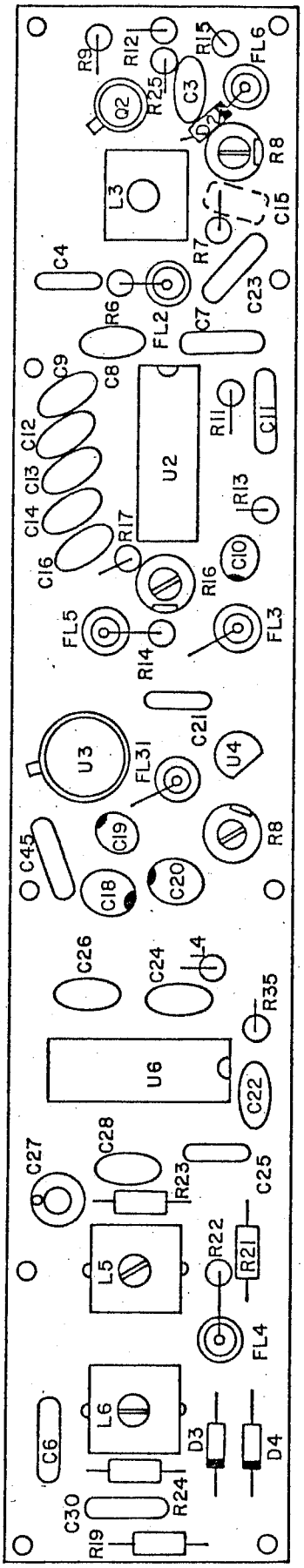

PR-700A
A3B1A2 - COMPONENT LOCATION,
2 MHz IF
81B312-333

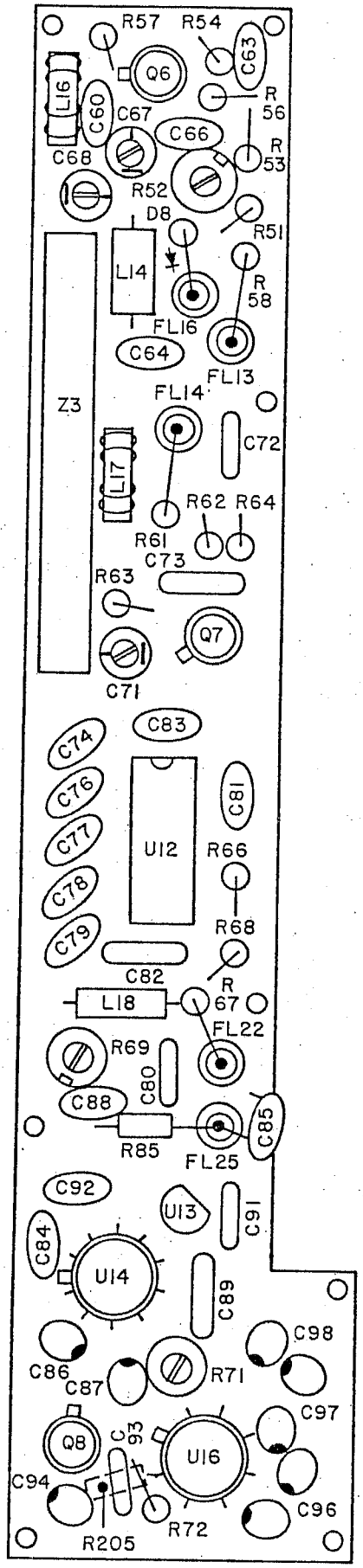

PR-700A
A3B1A3-COMPONENT LOCATION,
AUDIO IF

81A313-334

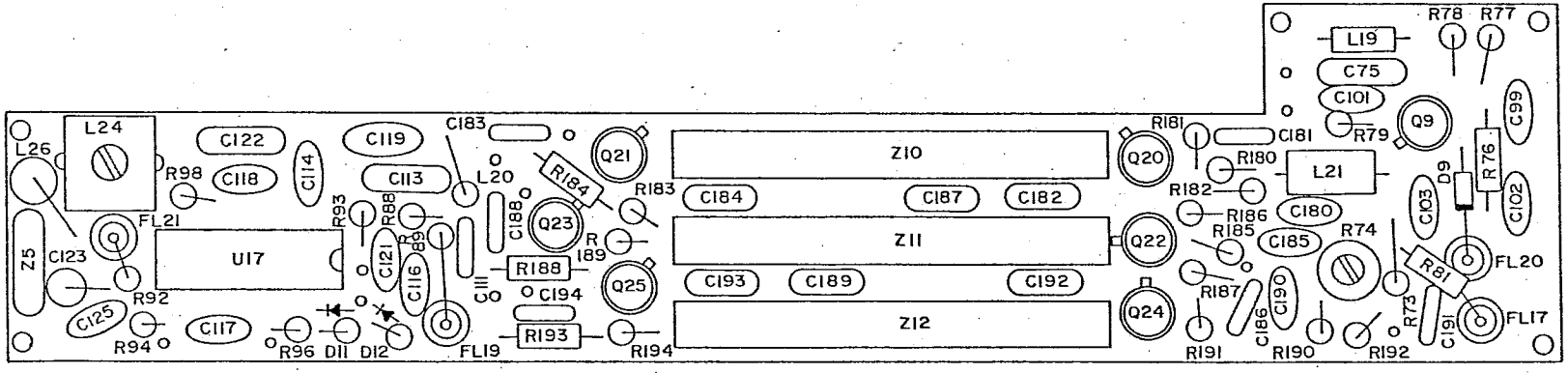

PR-700A
A3B1A4-COMPONENT LOCATION,
3 KHz AUDIO IF

81B314-335

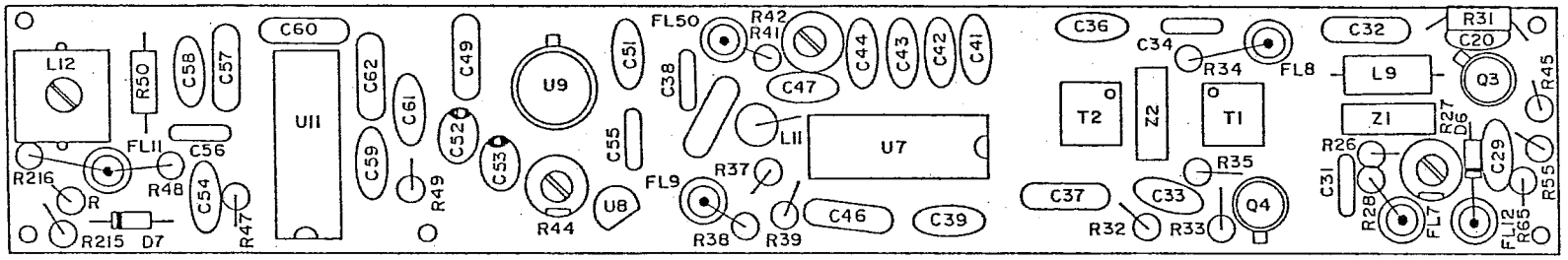

PR-700A
A3B1A5-COMPONENT LOCATION,
150 KHz AUDIO IF

818315-336

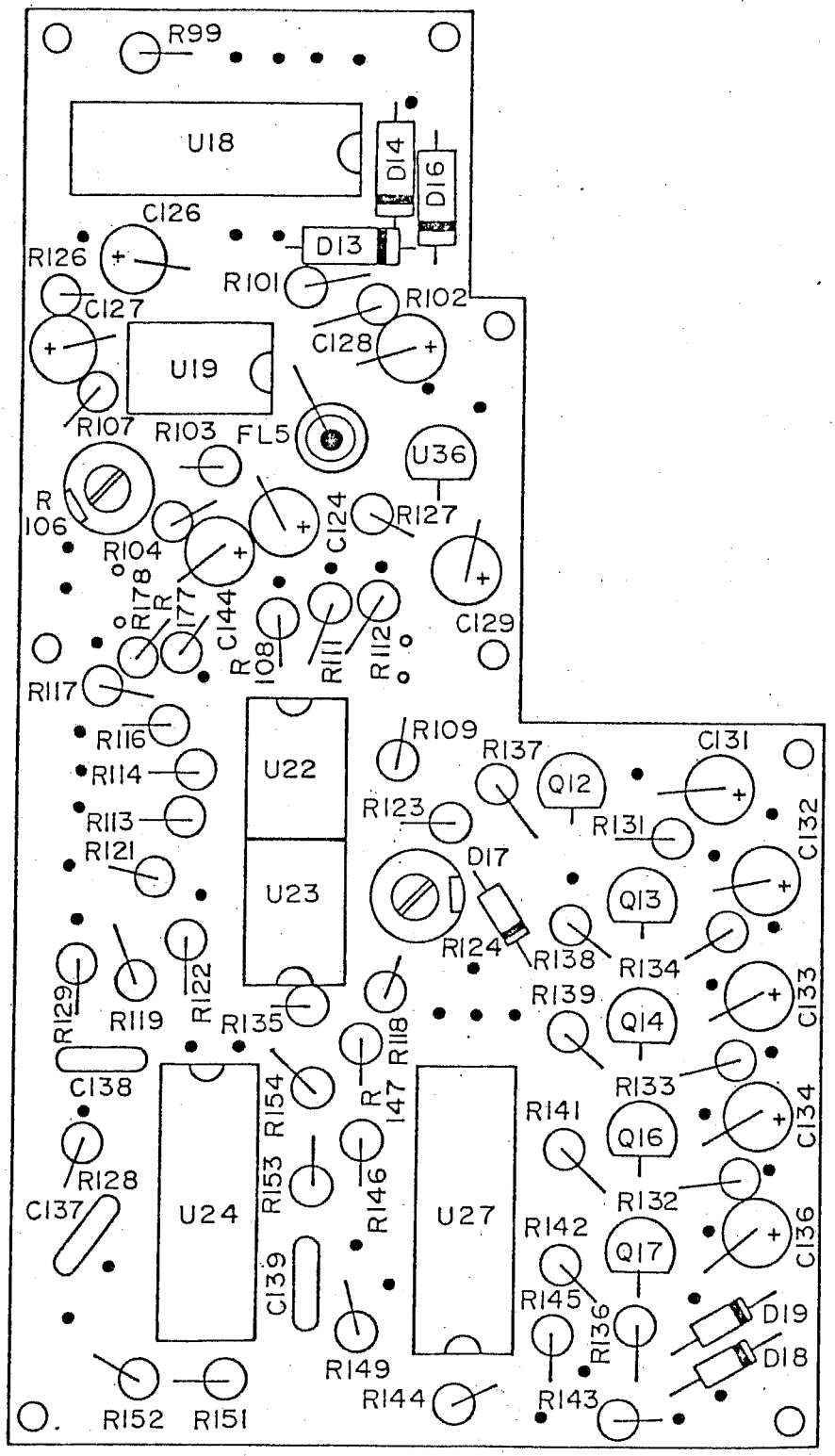

(USED ON UNITS THRU S/N 174)

PR-700A
A3B1A6 – COMPONENT LOCATION,
AUDIO POWER SWITCHING

81A316-337

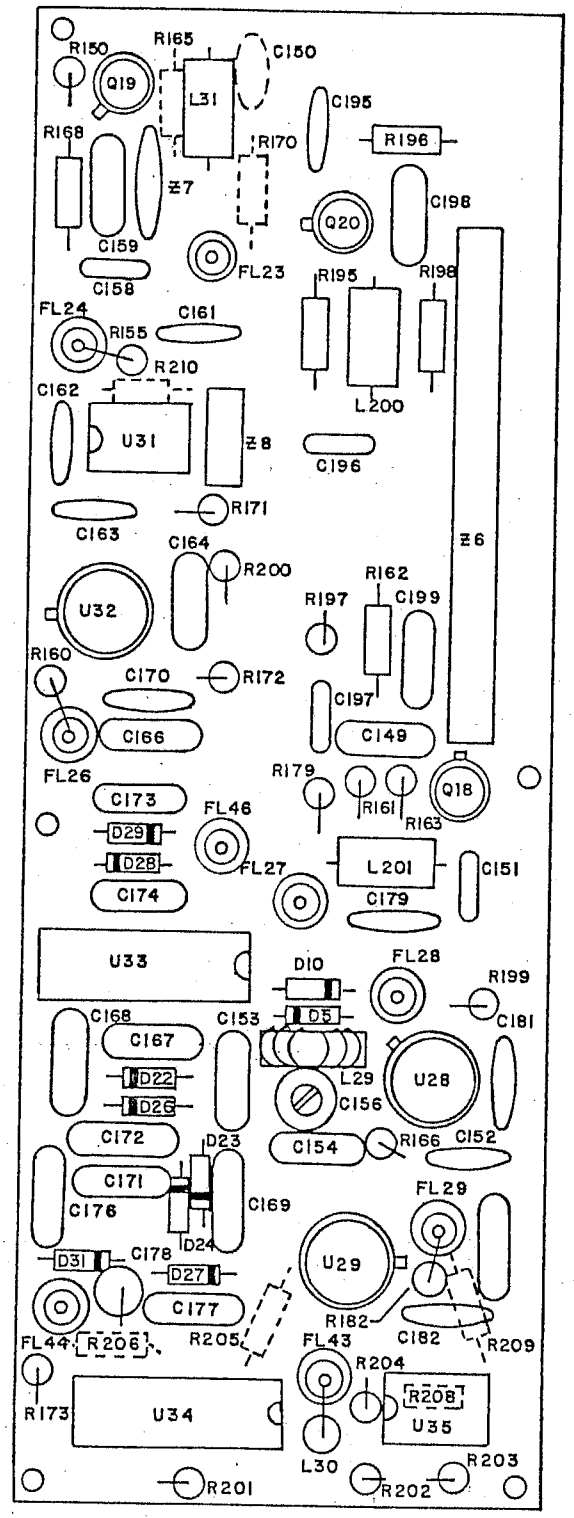

(USED ON UNITS THRU S/N 174)

PR-700A

A3B1A7-COMPONENT LOCATION

200/10 KHz VIDEO I.F

81B317-338

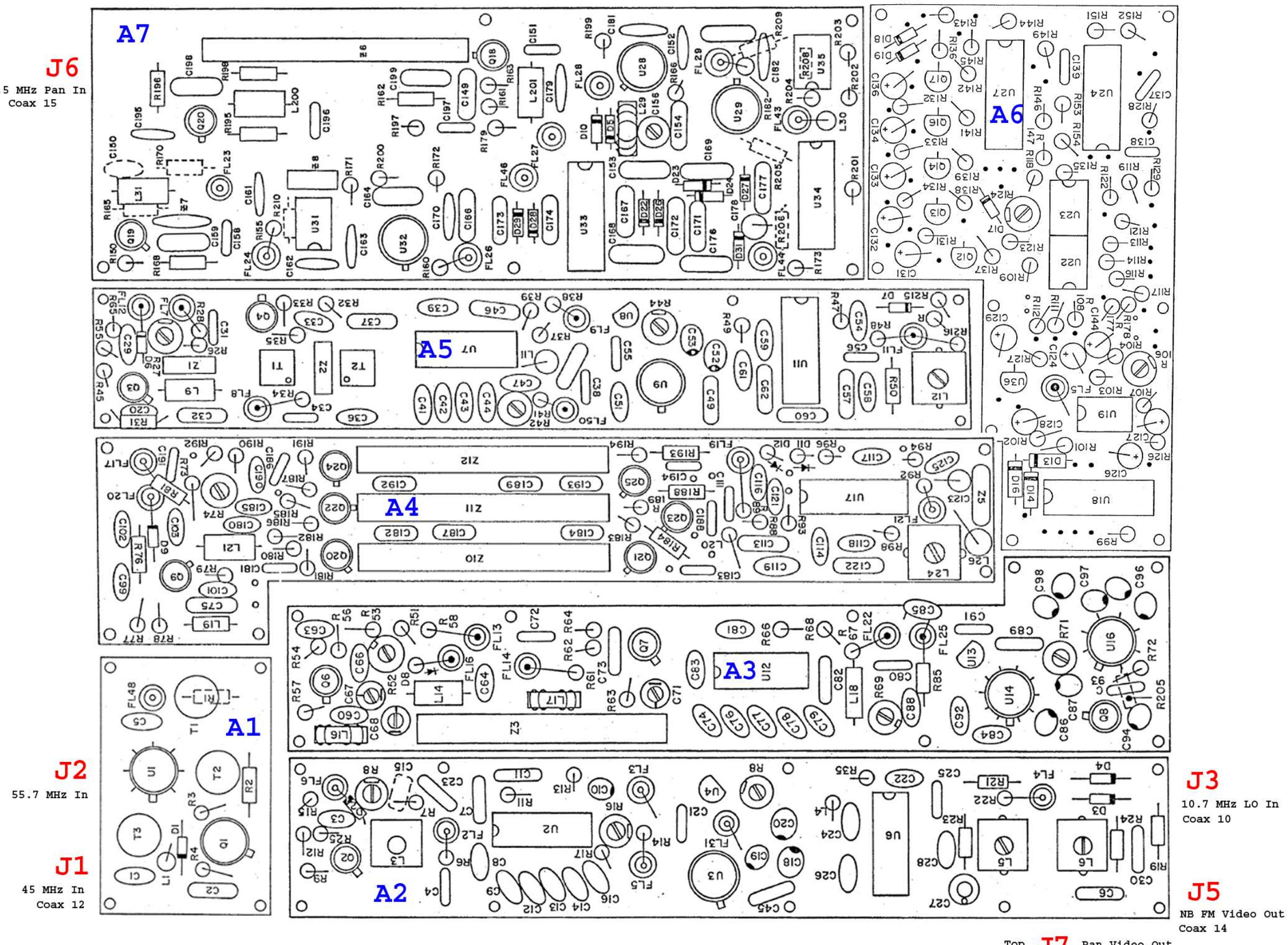

A3B1 IF Assembly

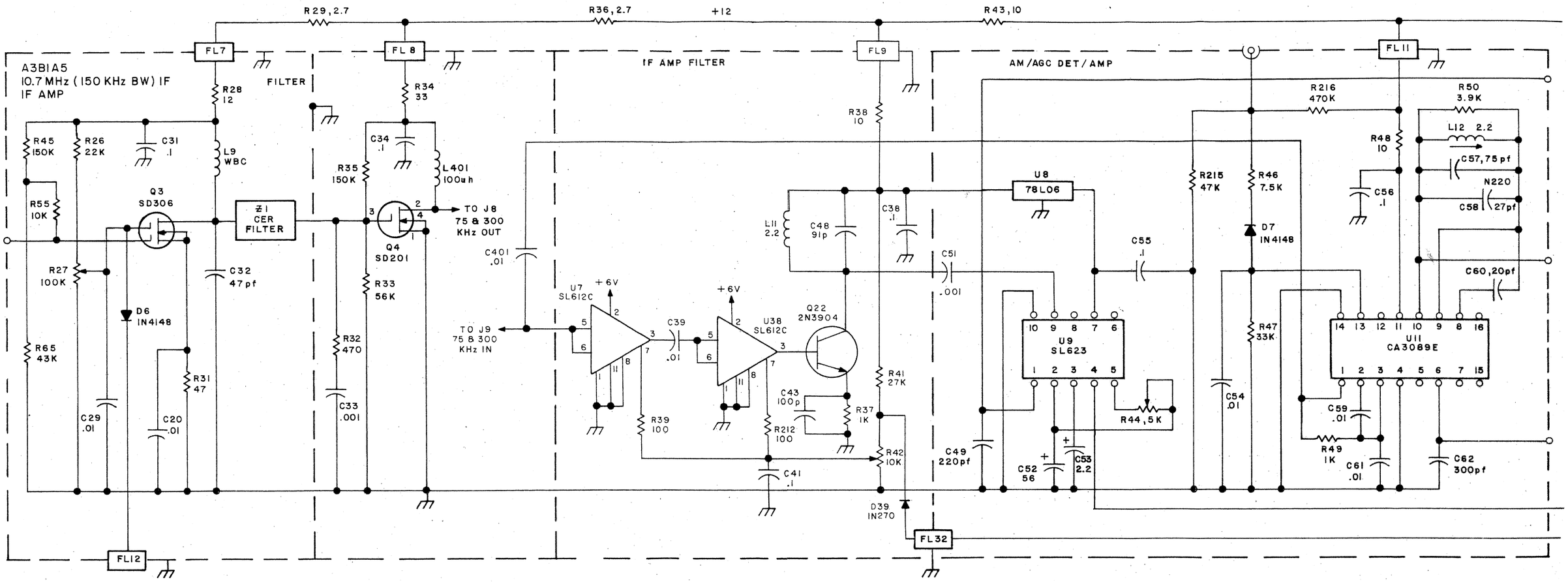

(USED ON UNITS S/N 175 & UP)

PR—700A (OPT. 4)
SECTION A3B1A5 PARTIAL SCHEMATIC
IF AMP
SHEET 2 OF 3

81R31—047P—1

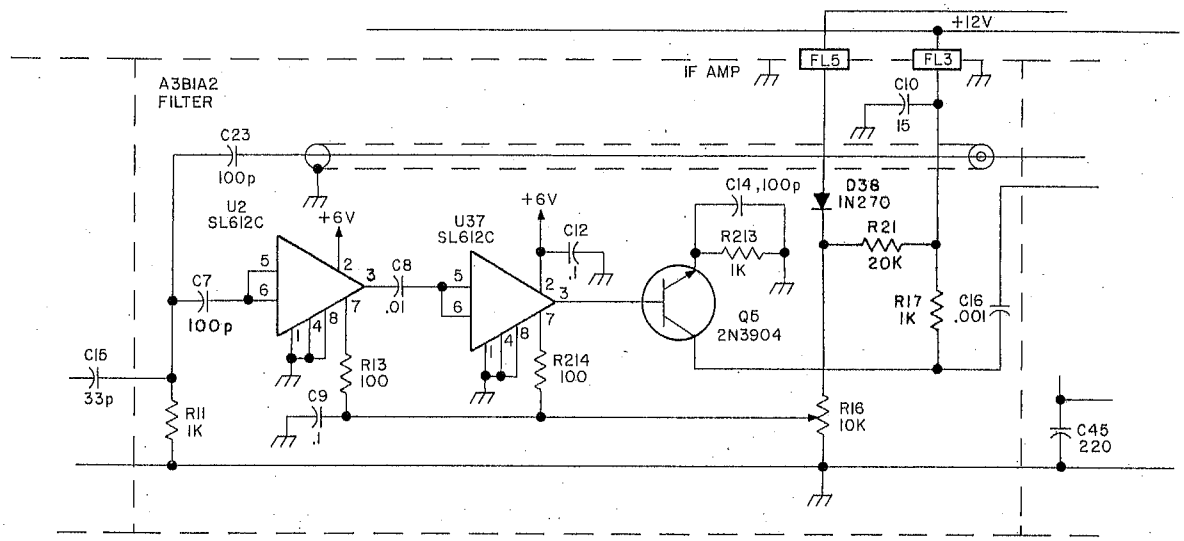

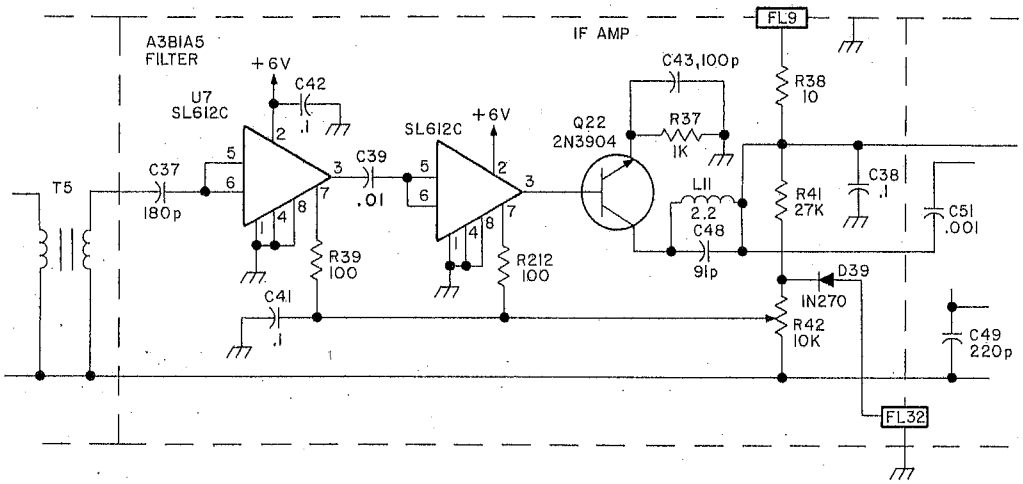

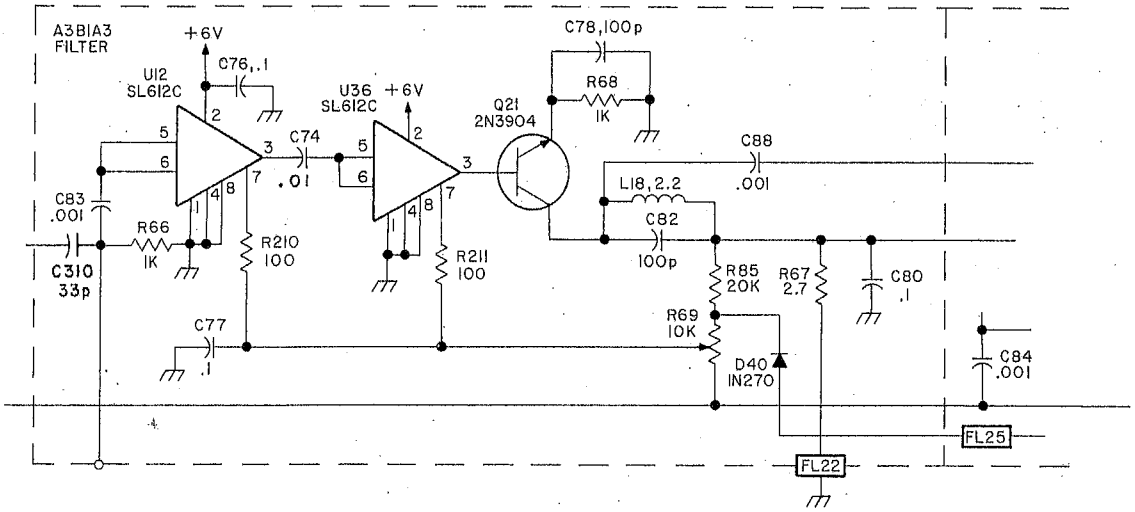

PR-700A
A3BI SCHEMATIC
IF (INSERT)
SHT 3 OF 3

81R31-047P-1

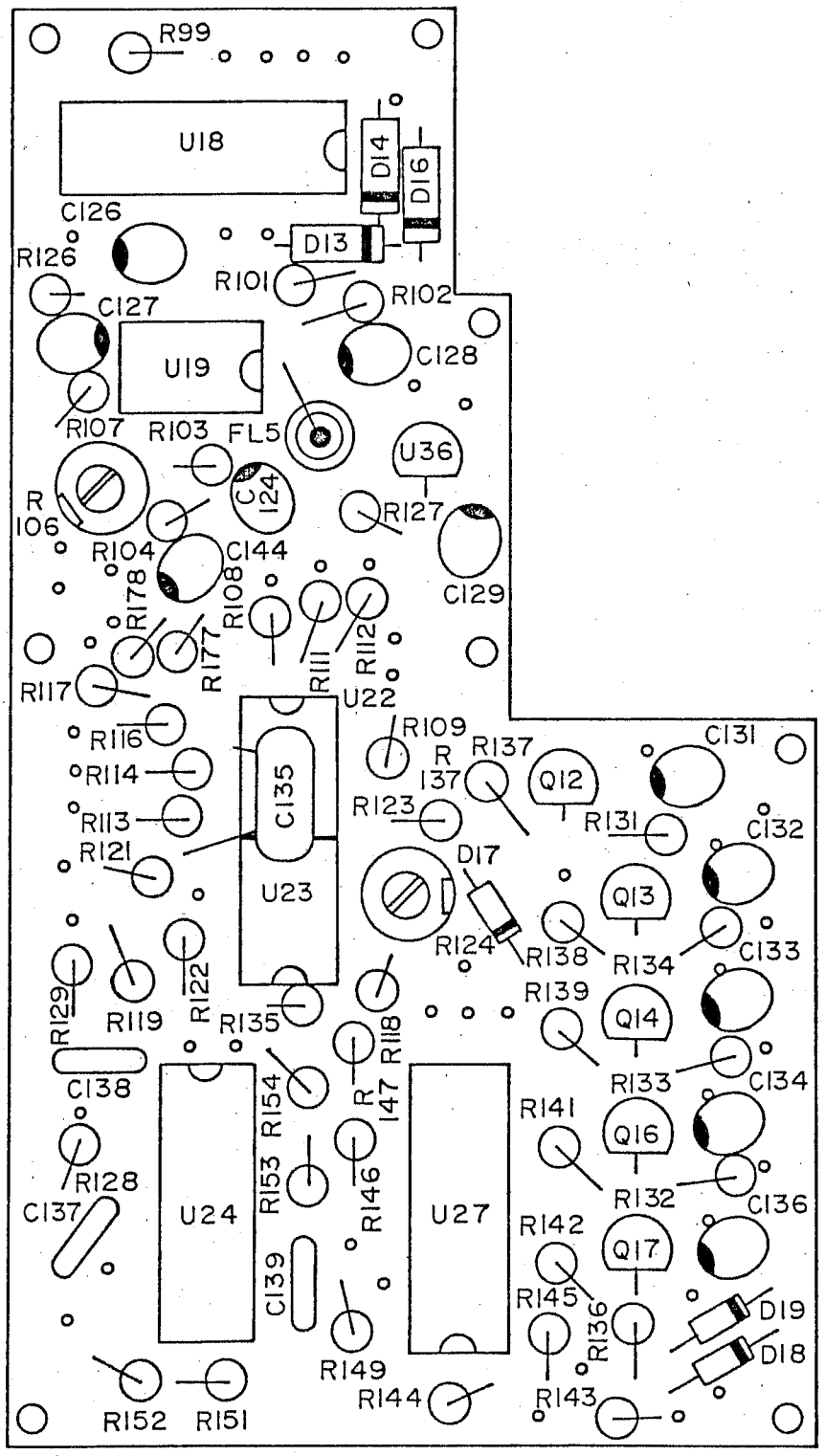

(USED ON S/N 175 & UP)

PR-700A
A3B1A6 – COMPONENT LOCATION,
AUDIO POWER SWITCHING

81A316-337-1

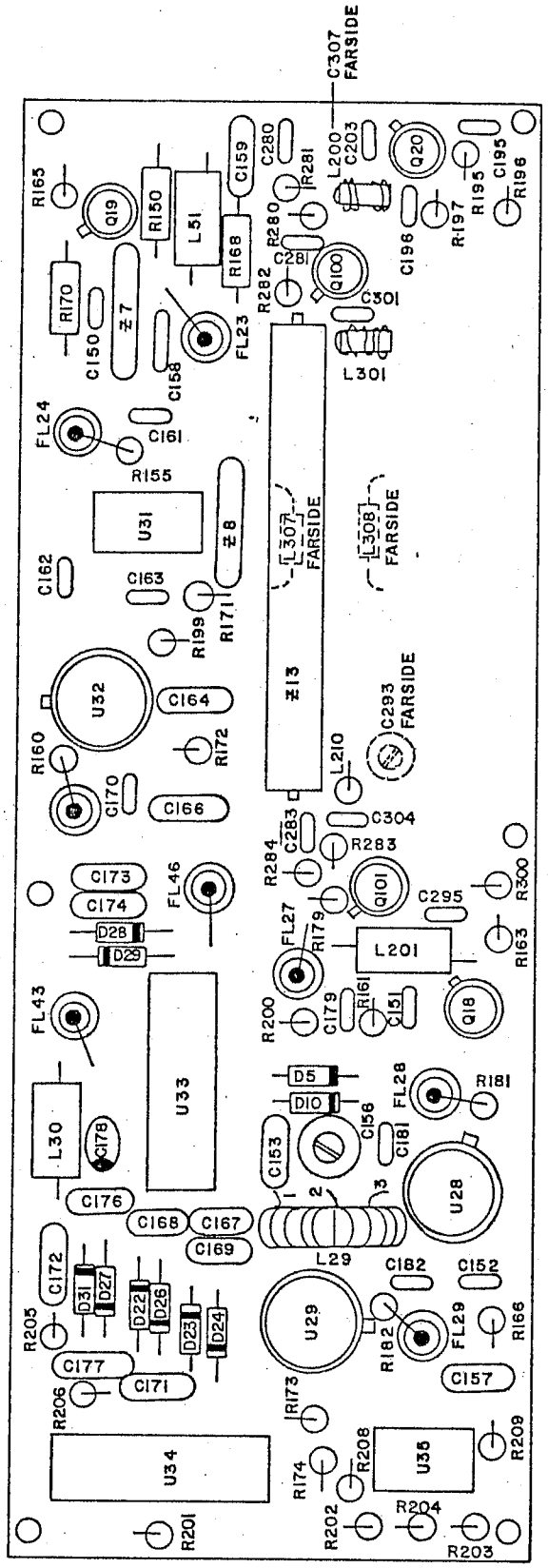

USED ON UNITS S/N 175 & UP

PR700A
A3B1A7-COMPONENT LOCATION
VIDEO I.F.
81A317-183

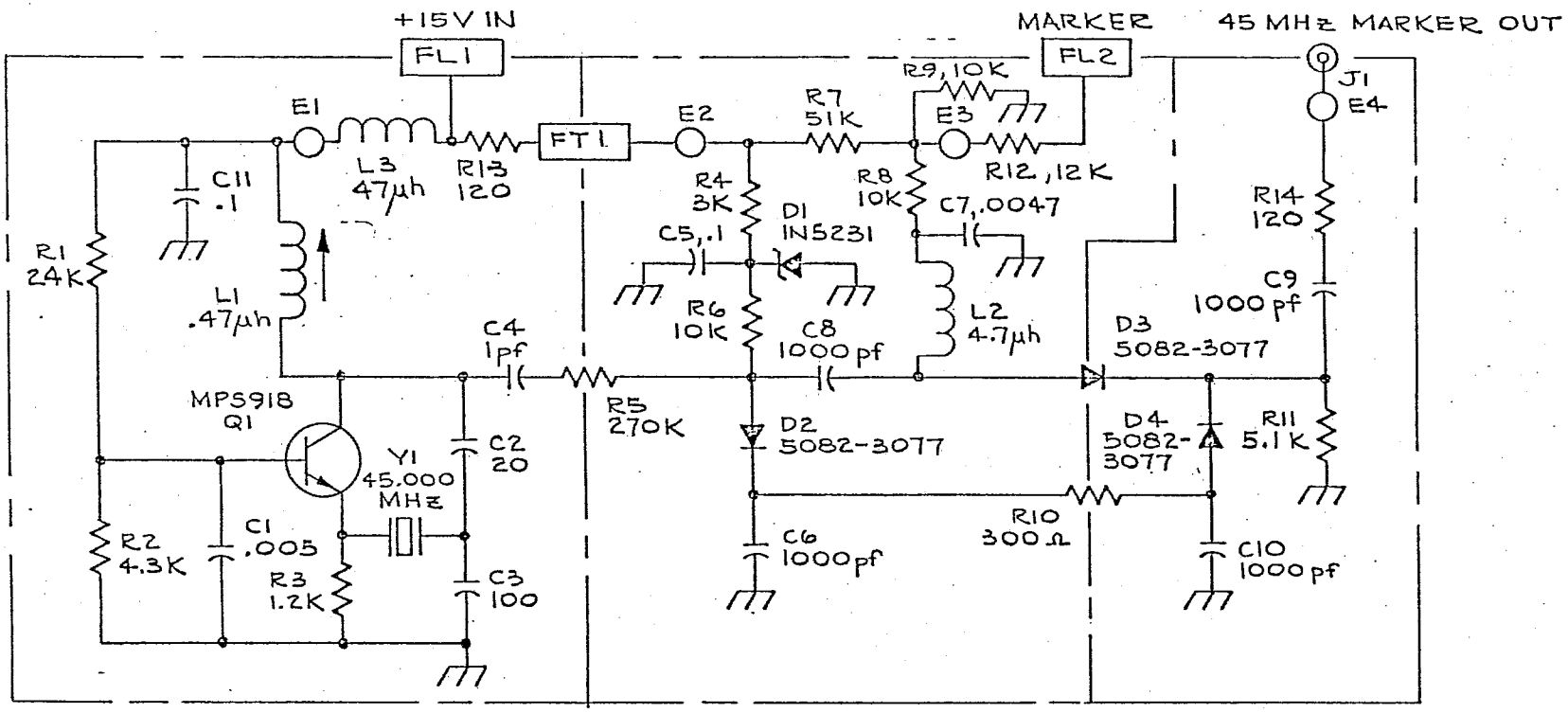

UNLESS OTHERWISE SPECIFIED:
ALL RESISTANCES ARE IN OHMS
ALL RESISTORS ARE 1/4 W
ALL CAPACITORS ARE IN MICROFARADS

REF DESIGNATIONS	
LAST	NOT USED
Q1	
Y1	
L3	
D4	
C11	
R14	
J1	
E4	
FT1	
FL2	

PR-700A
A3B2 - SCHEMATIC
45 MHz MARKER GENER

81B32-014

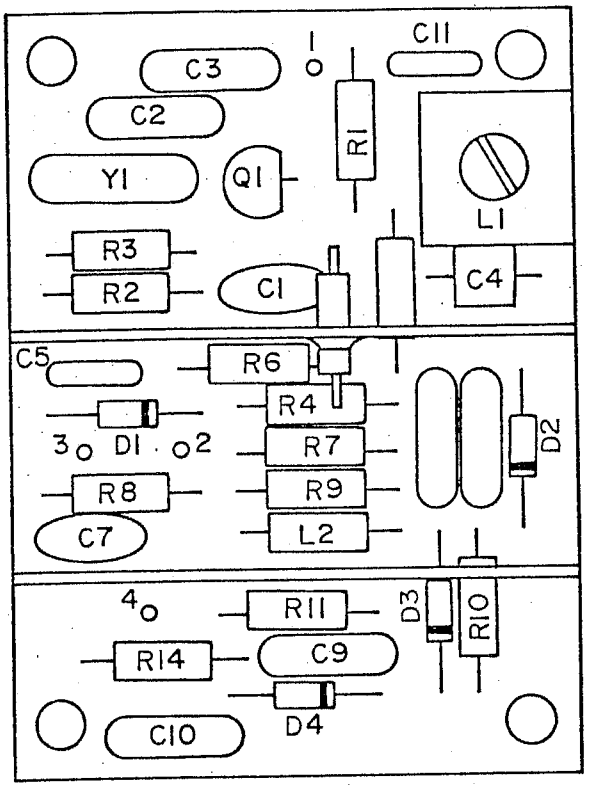

PR-700A
A3B2-COMPONENT LOCATION,
45 MHz MARKER GENERATOR

81A32-331

REV. A PER. CO. NO. 447 & 448 10/20/83 WMW
REV. B PER. CO. NO. 462 1/25/84 JFF
REV. C PER CO. NO. 568, 569, 570 7/23/85 WMW

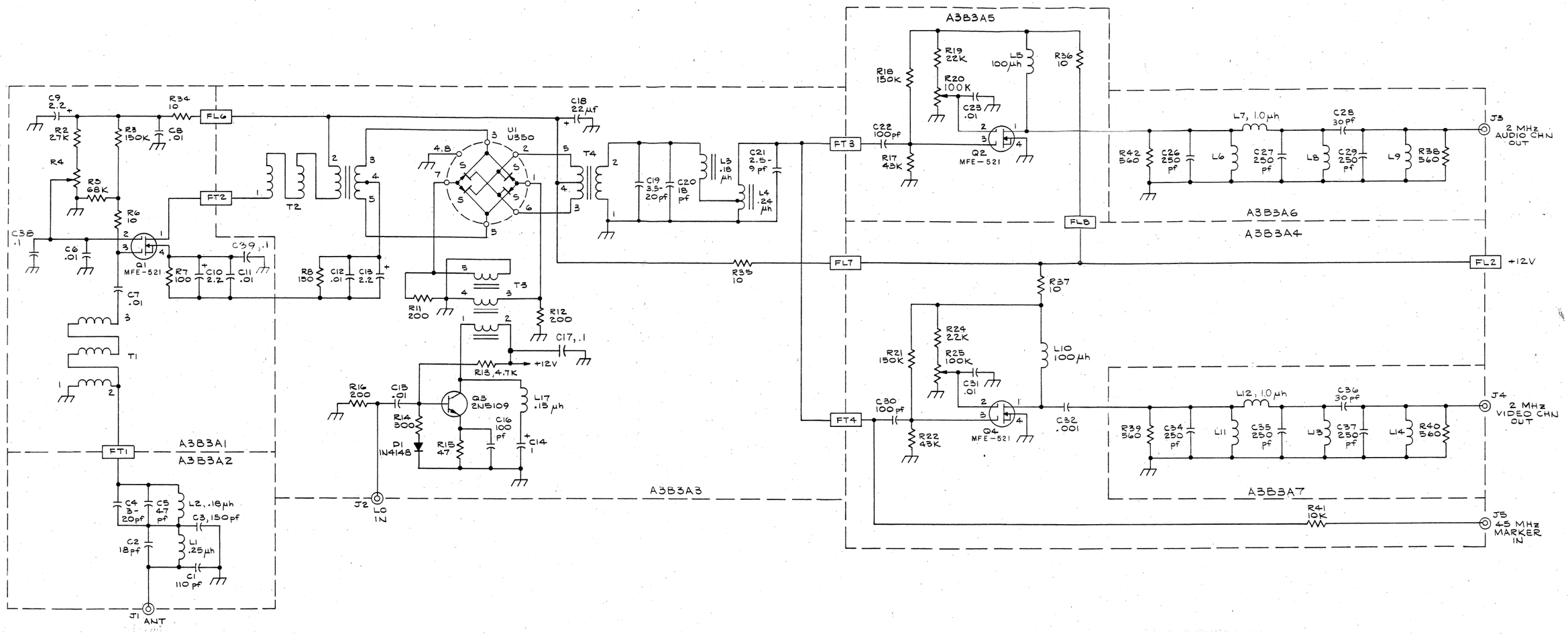

REF DESIGNATIONS	
LAST USED	NOT USED
C39	C24, 25, 33
D1	
FL8	FL3, 4, 1, 5
FT4	
J5	
L17	L15, 16
Q4	
R42	R9, 10, 23, 26-33
T4	R1
U1	

UNLESS OTHERWISE SPECIFIED:
ALL RESISTORS ARE IN OHMS & 1/4W
ALL CAPACITORS ARE IN MICROFARADS

PR-700A
A3B3 - SCHEMATIC,
45 MHz MIXER AMPLIFIER

81R33-043C

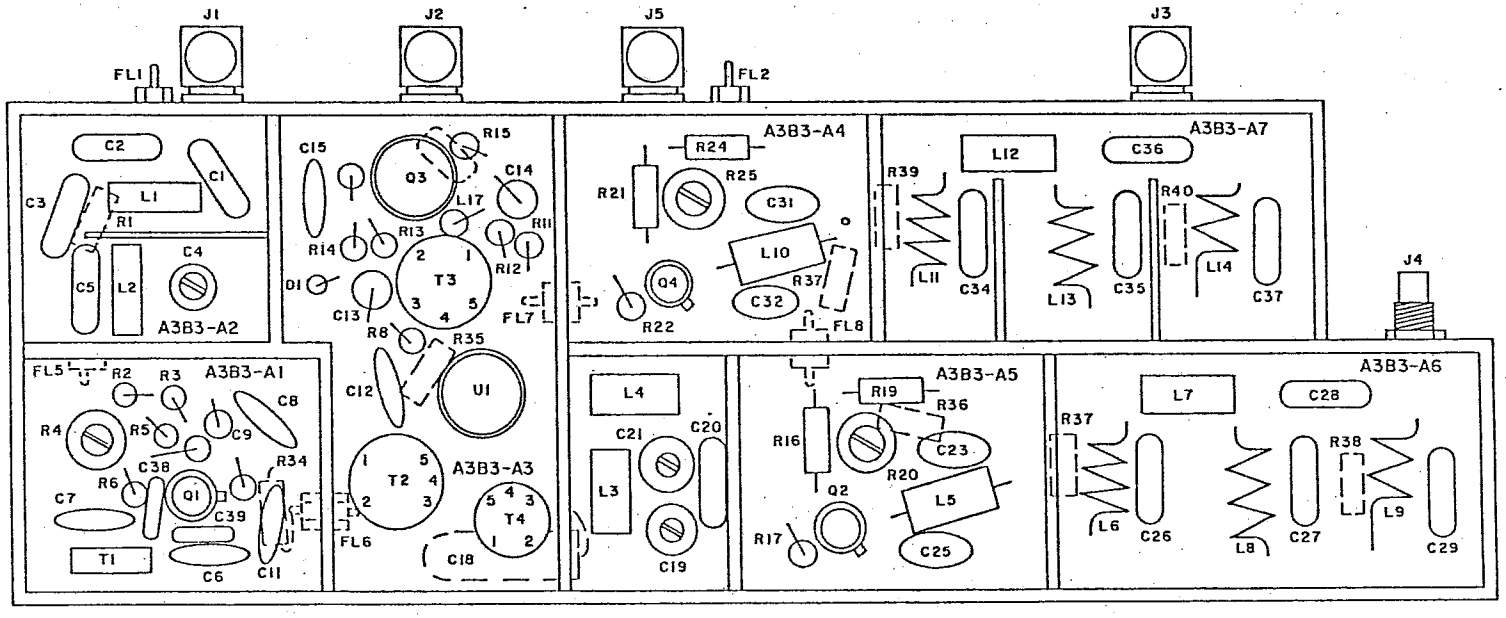

PR-700A
A3B3-COMPONENT LOCATION,
45 MHz MIXER AMPLIFIER
81B33-311

REV. PER C.O. 232 7/9/80 KS
REV. PER C.O. 325 7/2/81 HW

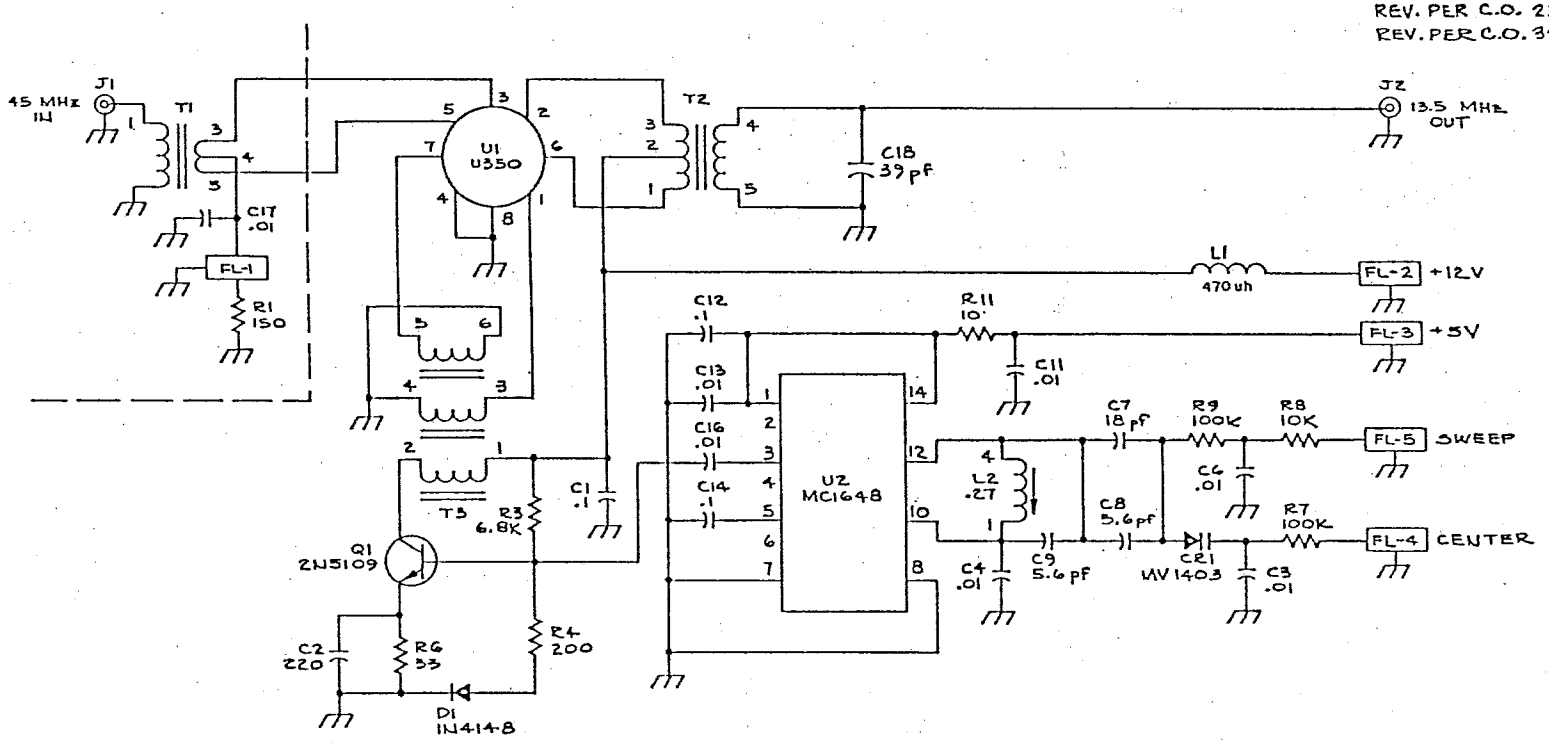

REF DESIGNATIONS	
LAST USED	NOT USED
C18	C5, C10, C15
CR1	
D1	
FL5	
J2	
L2	
Q1	
R9	R5, R10, R2
T3	
U2	

UNLESS OTHERWISE SPECIFIED:
ALL RESISTANCES ARE IN OHMS
ALL RESISTORS ARE 1/4 W
ALL CAPACITORS ARE IN MICROFARADS

PR-700A
A3B4 - SCHEMATIC,
45/13.5 MHz CONVERTER

81C34-025

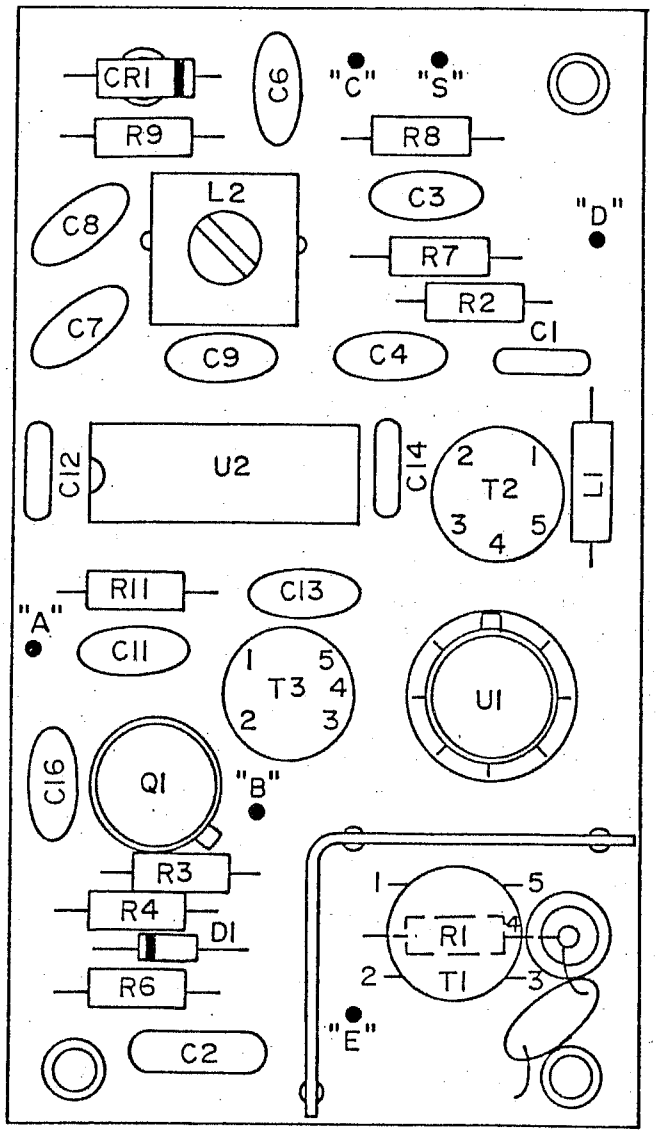

PR-700A
A3B4-COMPONENT LOCATION,
45/ 13.5 MHz CONVERTER

81B34-330

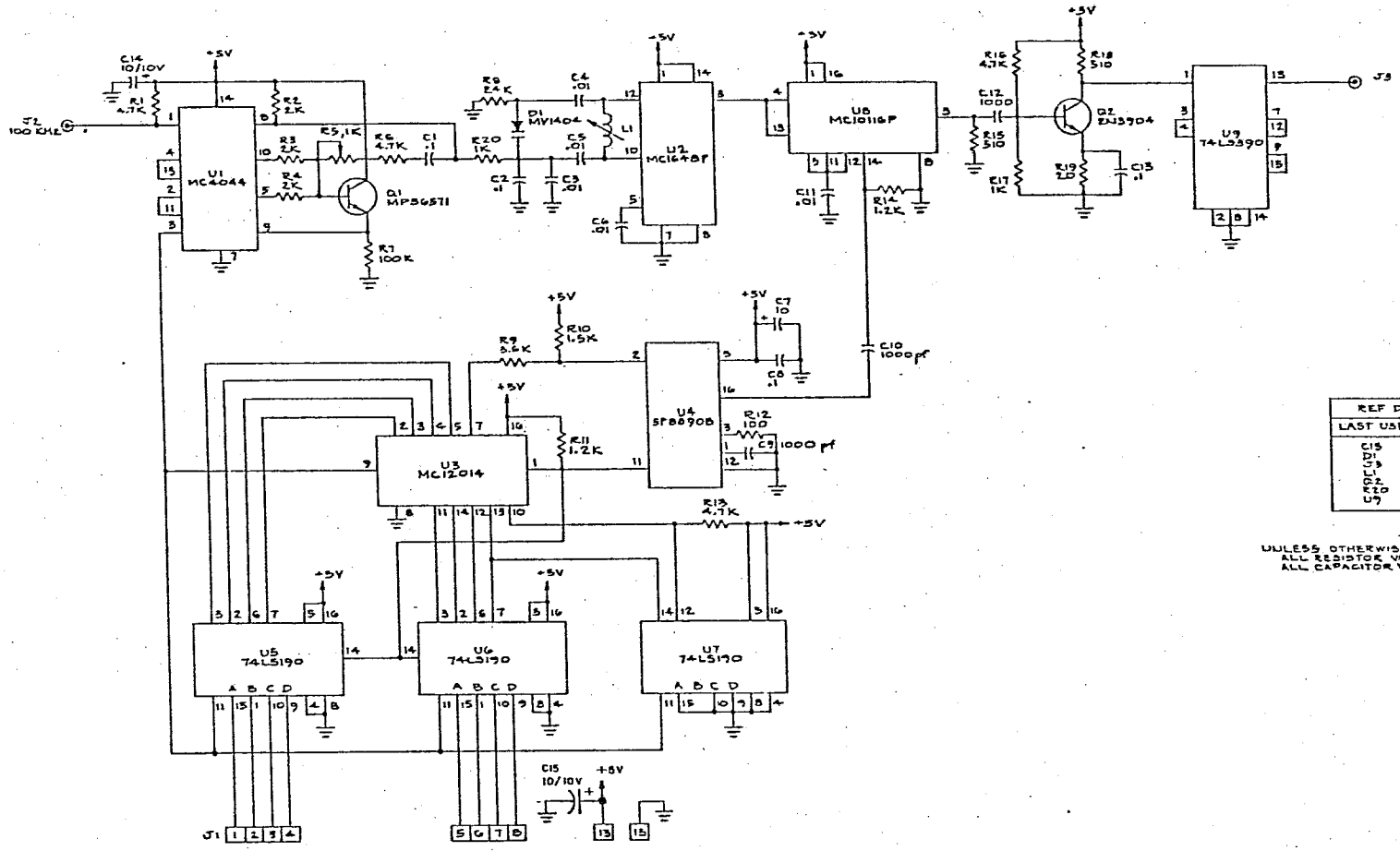

REF DESIGNATIONS	
LAST USED	NOT USED
C15 D1 J3 L1 Q2 R20 U9	

UNLESS OTHERWISE SPECIFIED:
ALL RESISTOR VALUES ARE IN OHMS 1/8W
ALL CAPACITOR VALUES ARE IN MICROFARADS

(USED ON S/N 126 & UP)

PR-700A
A4B1-SCHEMATIC,
29/29.9 MHz SYNTHESIZER
81D41-020-1

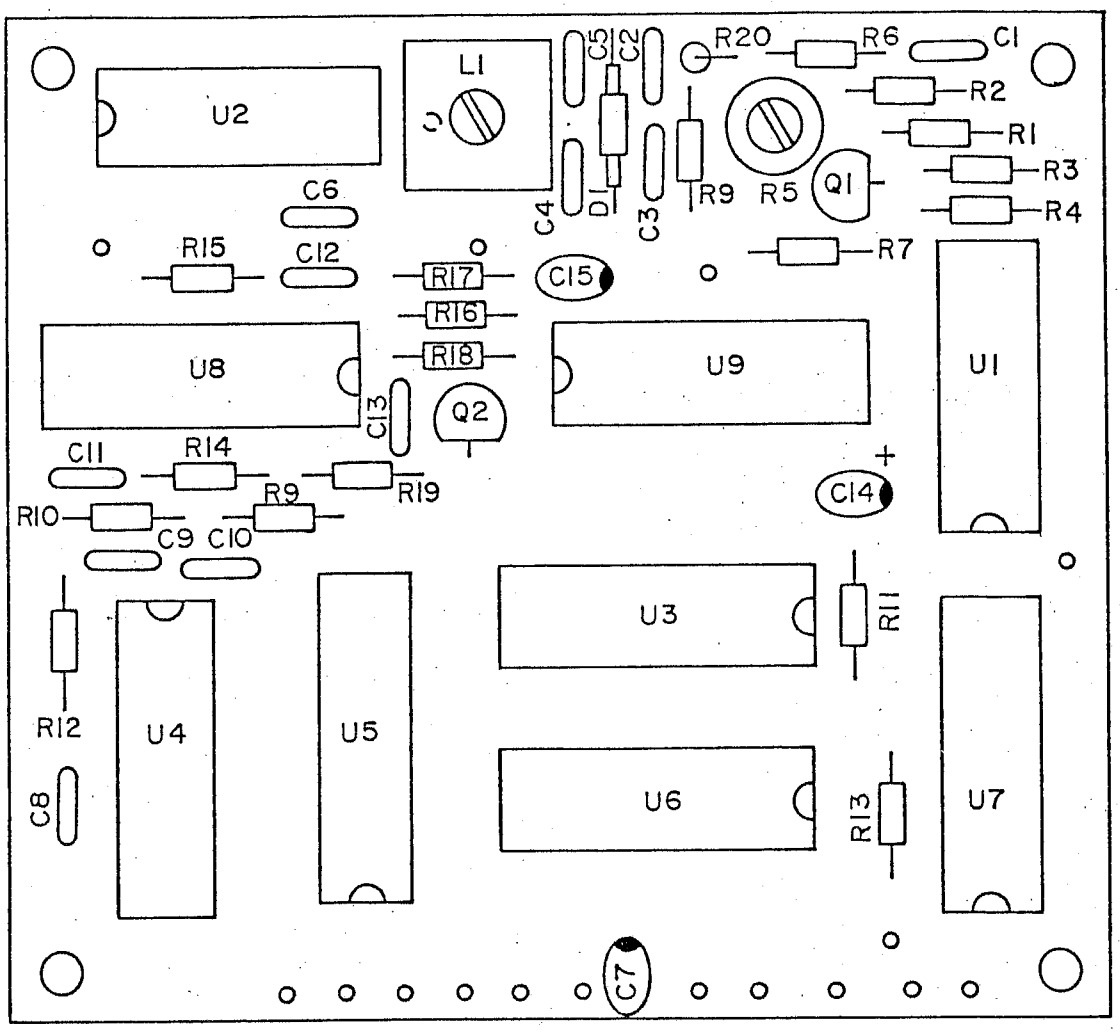

(USED ON S/N 126 & UP)

PR-700A
A4B1A2-COMPONENT LOCATION,
20-29.9 MHz SYNTHESIZER

81A41-162

EFF. C.O. 184 10/16/79 PS

REV PER CO NO 19 (PR-707B) 10/29/84 WMW

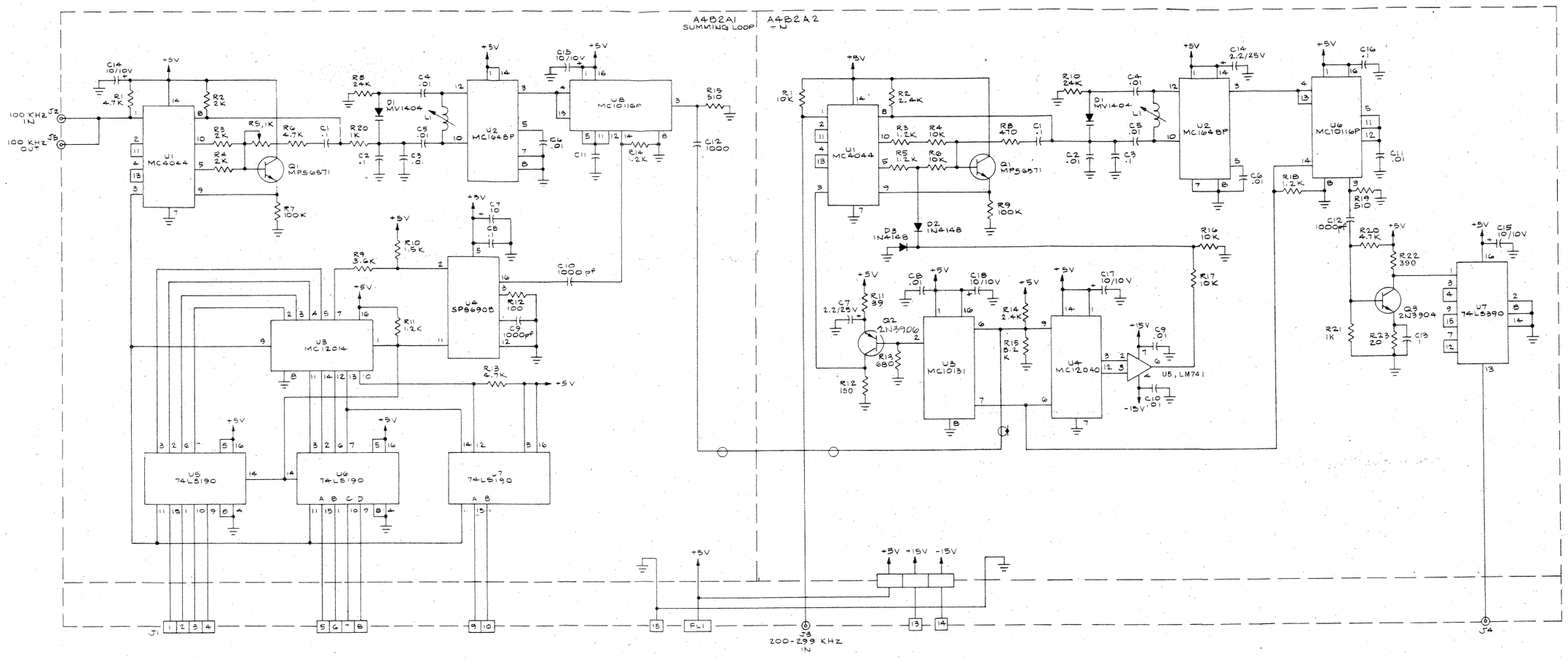

REF DESIGNATIONS		
	LAST USED	NOT USED
A4B2 A1	C15 D3 L1 Q1 R20 U8	C18 R16-19
A4B2 A2	C18 D3 L1 Q3 R23 U7	R7

UNLESS OTHERWISE SPECIFIED:
ALL RESISTOR VALUES ARE IN OHM & 1/8W
ALL CAPACITOR VALUES ARE IN MICROFARADS

(USED ON UNITS S/N 126 & UP)

PR-700A
A4B2-SCHEMATIC,
20/29.999 MHz SYNTHESIZER

81R42-018-1

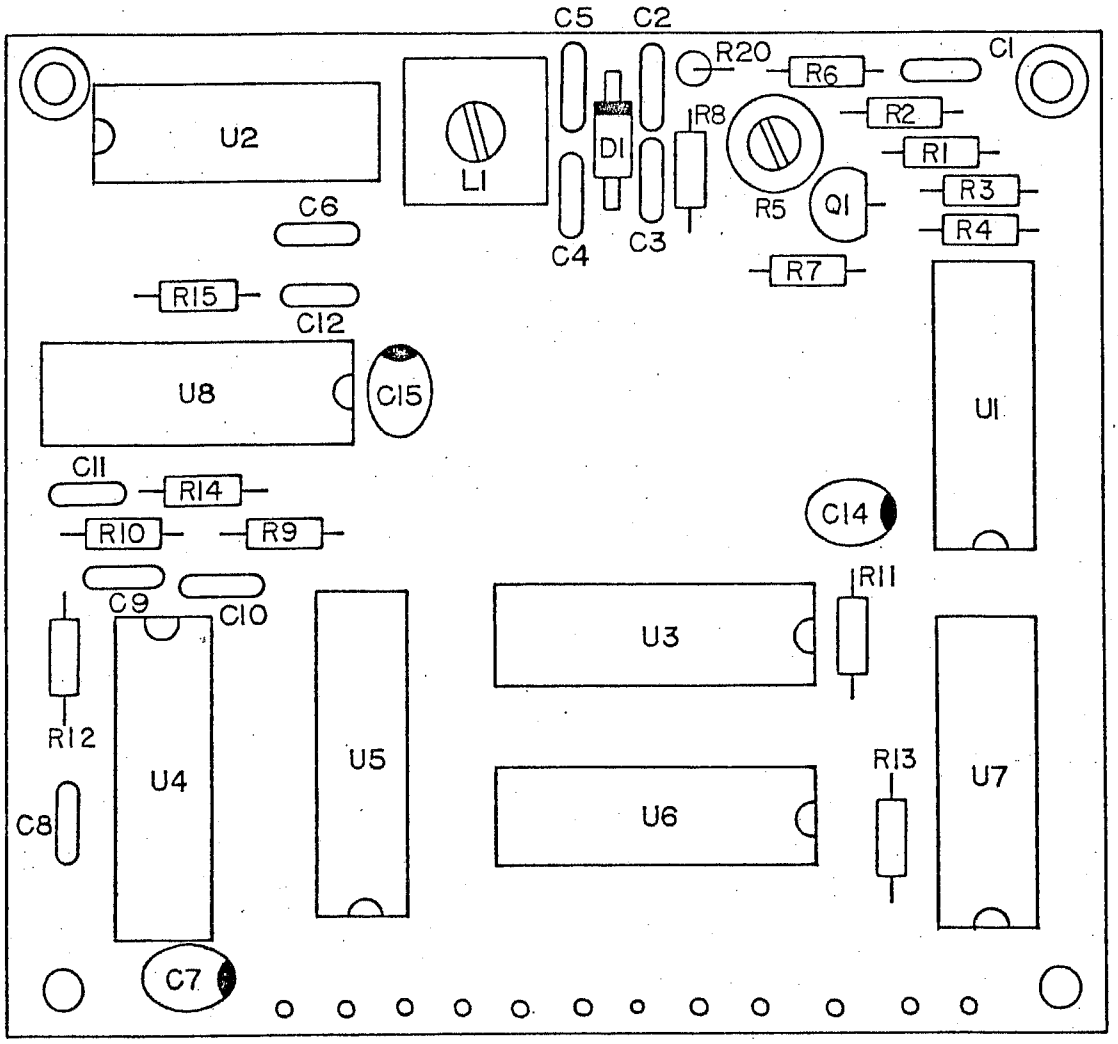

(USED ON UNITS S/N 126 & UP)

PR-700A
A4B2A1-COMPONENT LOCATIONS,
20-29.999 MHz SYNTHESIZER

81A42-169

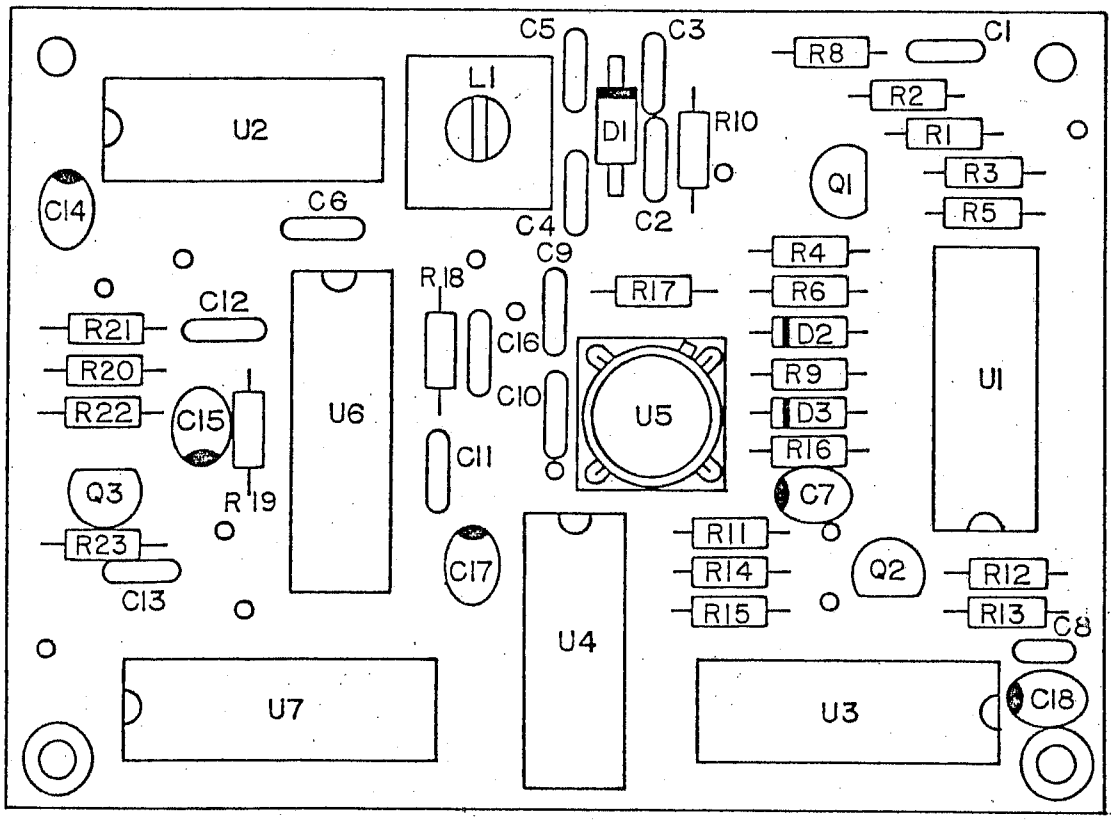

(USED ON UNITS S/N 126 & UP)

PR-700A
A4B2A2-COMPONENT LOCATIONS,
20-29.999 MHz SYNTHESIZER

81A42-163

A - EFF PER C.O. 170, 171, 185 10/15/79 PS
B - EFF. PER C.O. 214 6·2·80 PC
C - EFF. C.O. #248, 249, 259 9/17/80 RK
D - EFF C.O. NO 380 7·7·82 WMW
E - EFF C.O. NO 559 7·23·85 WMW

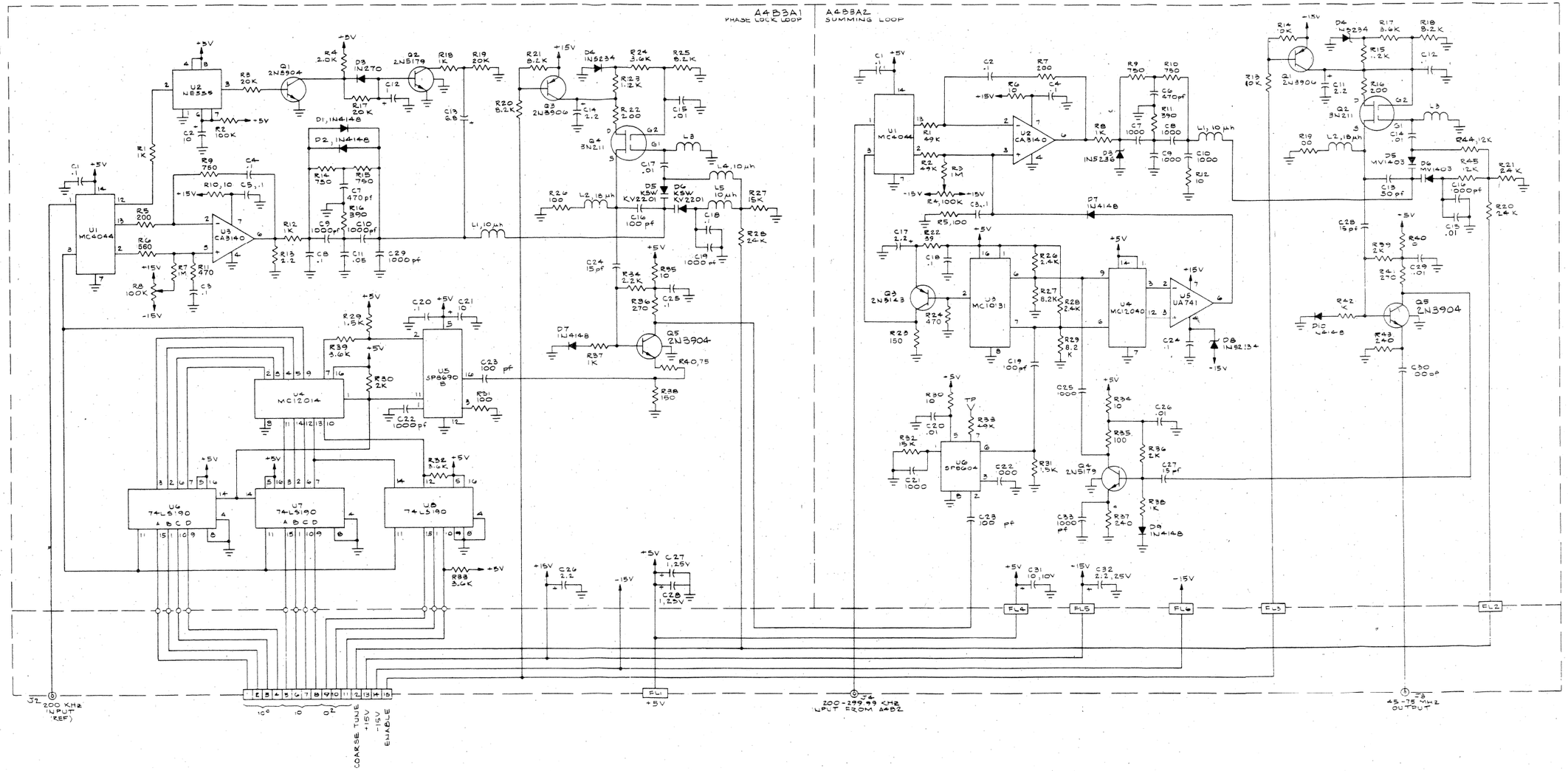

REFERENCE DESIGNATIONS			
A4B3A1		A4B3A2	
LAST USED	NOT USED	LAST USED	NOT USED
C29	C6	C32	C8
D7		D10	D1,2
L5		L5	
Q3		Q3	
R40		R43	R25
U8		U6	

UNLESS OTHERWISE SPECIFIED:
ALL RESISTORS ARE IN OHMS AND 1/8 W
ALL CAPACITORS ARE IN MICROFARADS.

(USED ON S/N 126 & UP)

PR-700A
A4B3 - SCHEMATIC,
45/75 MHz SYNTHESIZER

81R43-019-1E

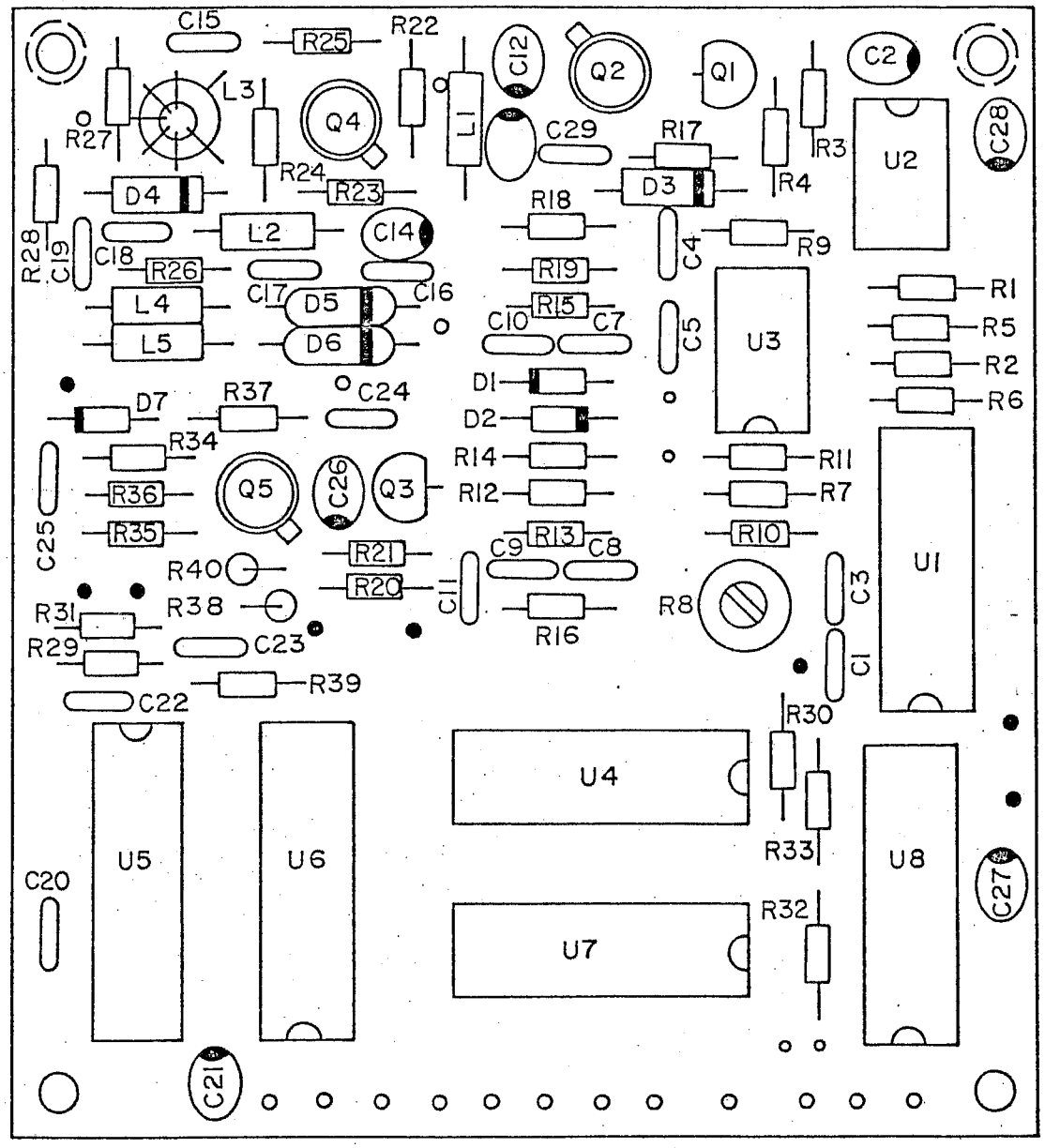

(USED ON UNITS S/N 126 & UP)

PR-700A
A4B3A1-COMPONENT LOCATION
45-75 MHz SYNTHESIZER

81A43-171

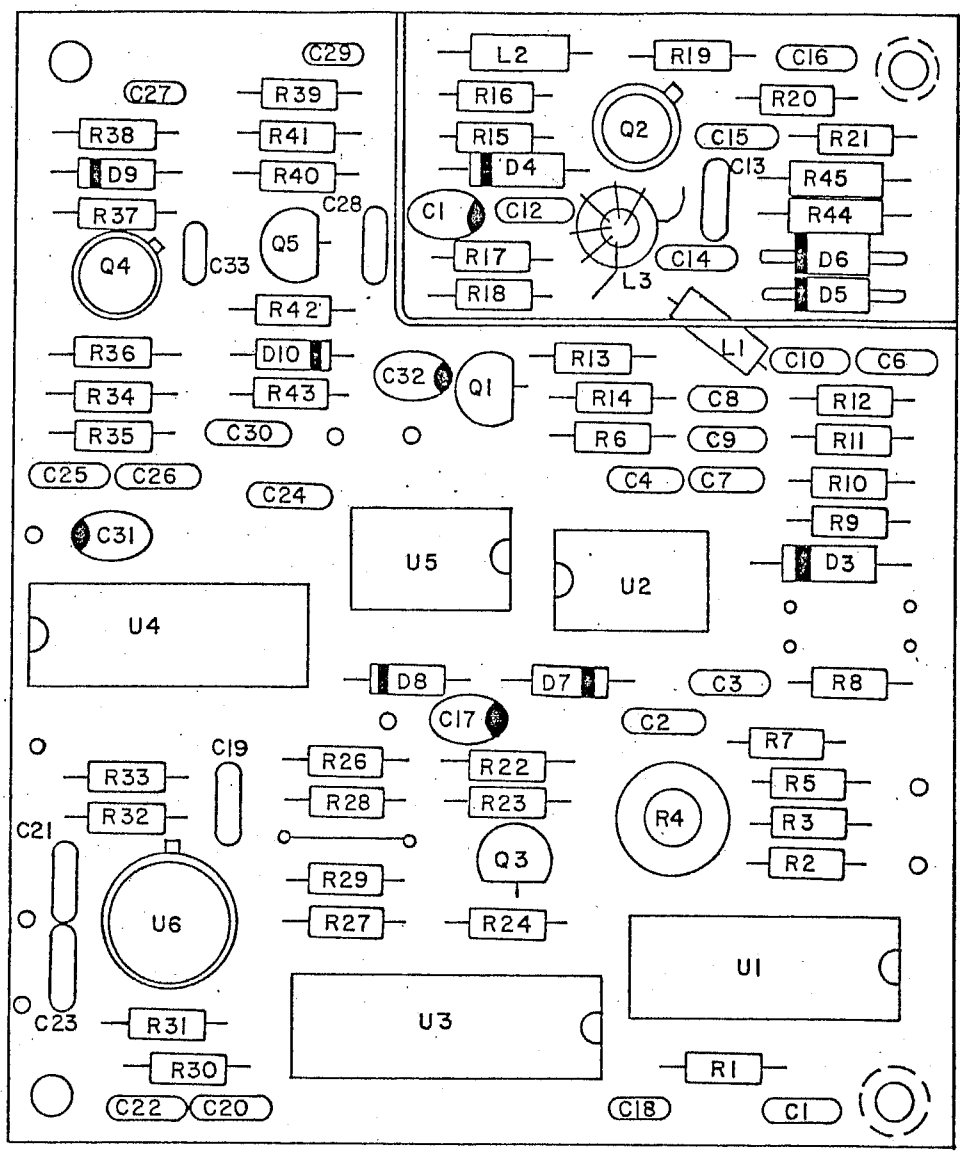

PR-700A
A4B3A2-COMPONENT LOCATION
45-75 MHz SYNTHESIZER
81A43-172

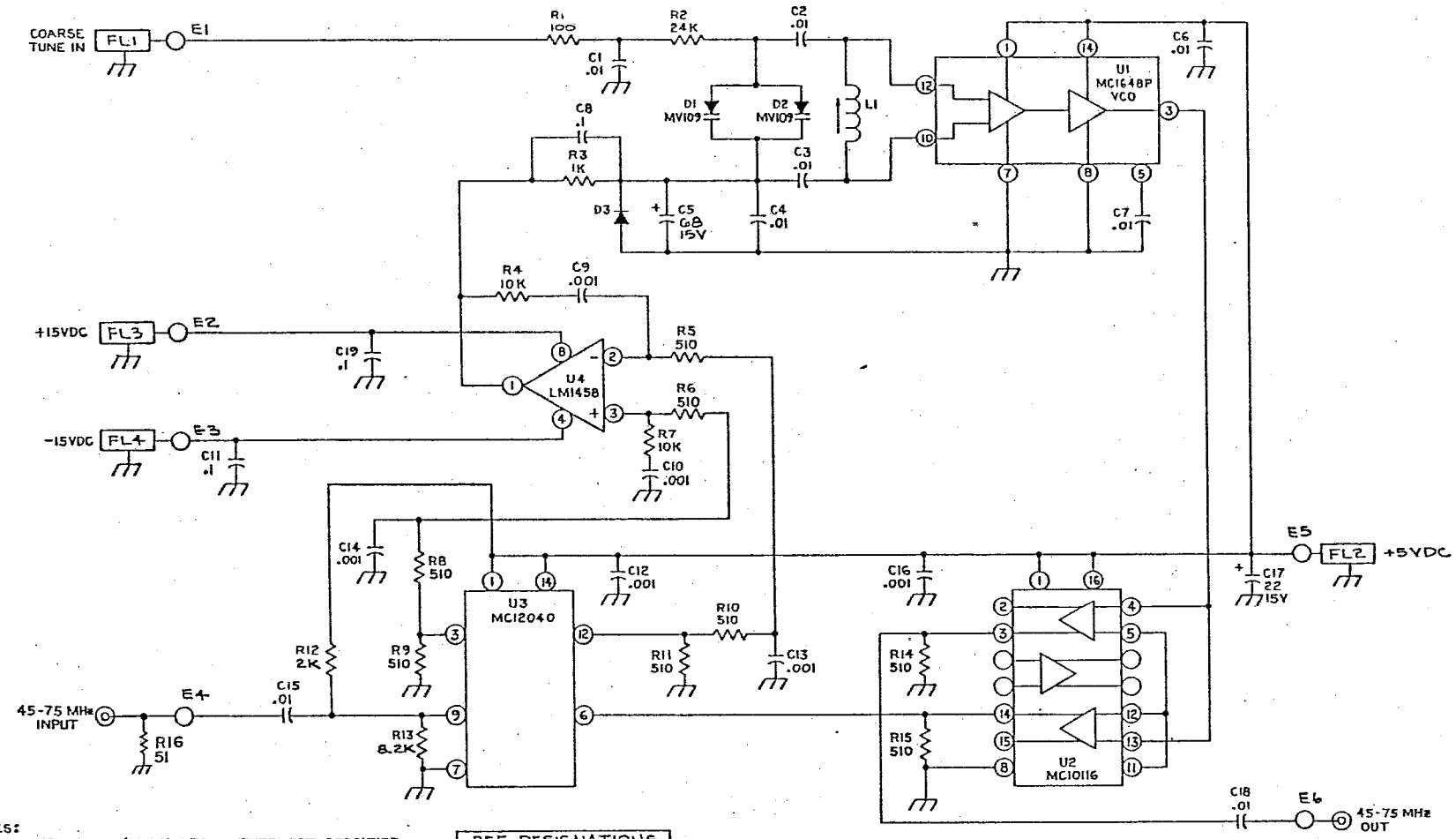

NOTES:
1. ALL RESISTORS 1/4 W UNLESS OTHERWISE SPECIFIED.
2. ALL RESISTANCES IN OHMS.
3. ALL CAPACITANCES IN μf UNLESS OTHERWISE SPECIFIED.

REF DESIGNATIONS	
LAST USED	NOT USED
C19 D3 FL4 L1 R16 U4	

PR-700A
A4B4 - SCHEMATIC,
45/75 MHz VCO ASSEMI

81C44-021

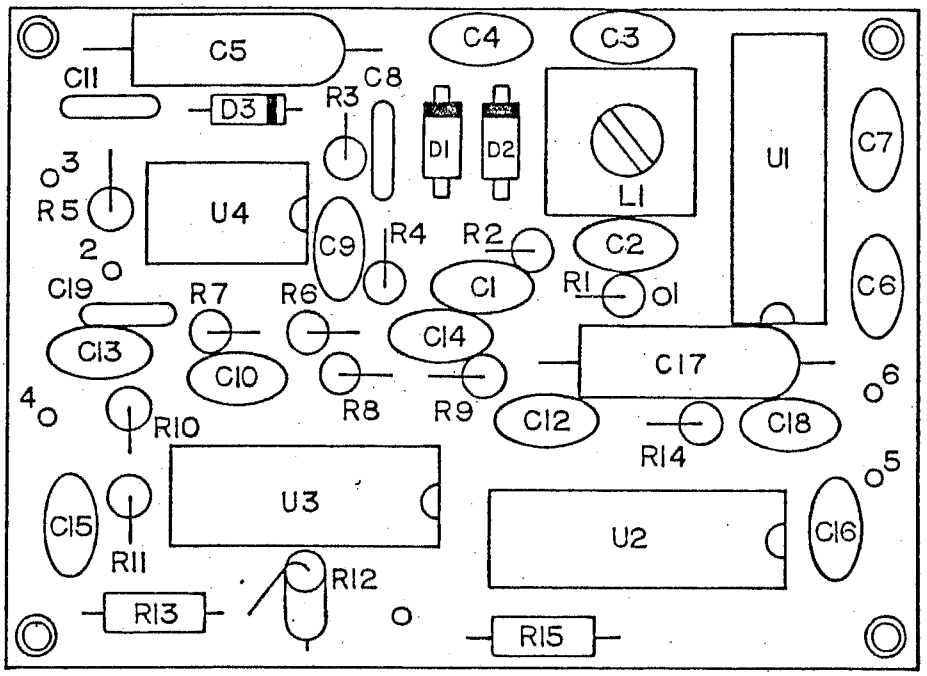

PR-700A
A4B4-COMPONENT LOCATIONS,
45-75 MHz VCO ASSEMBLY

81A44-329

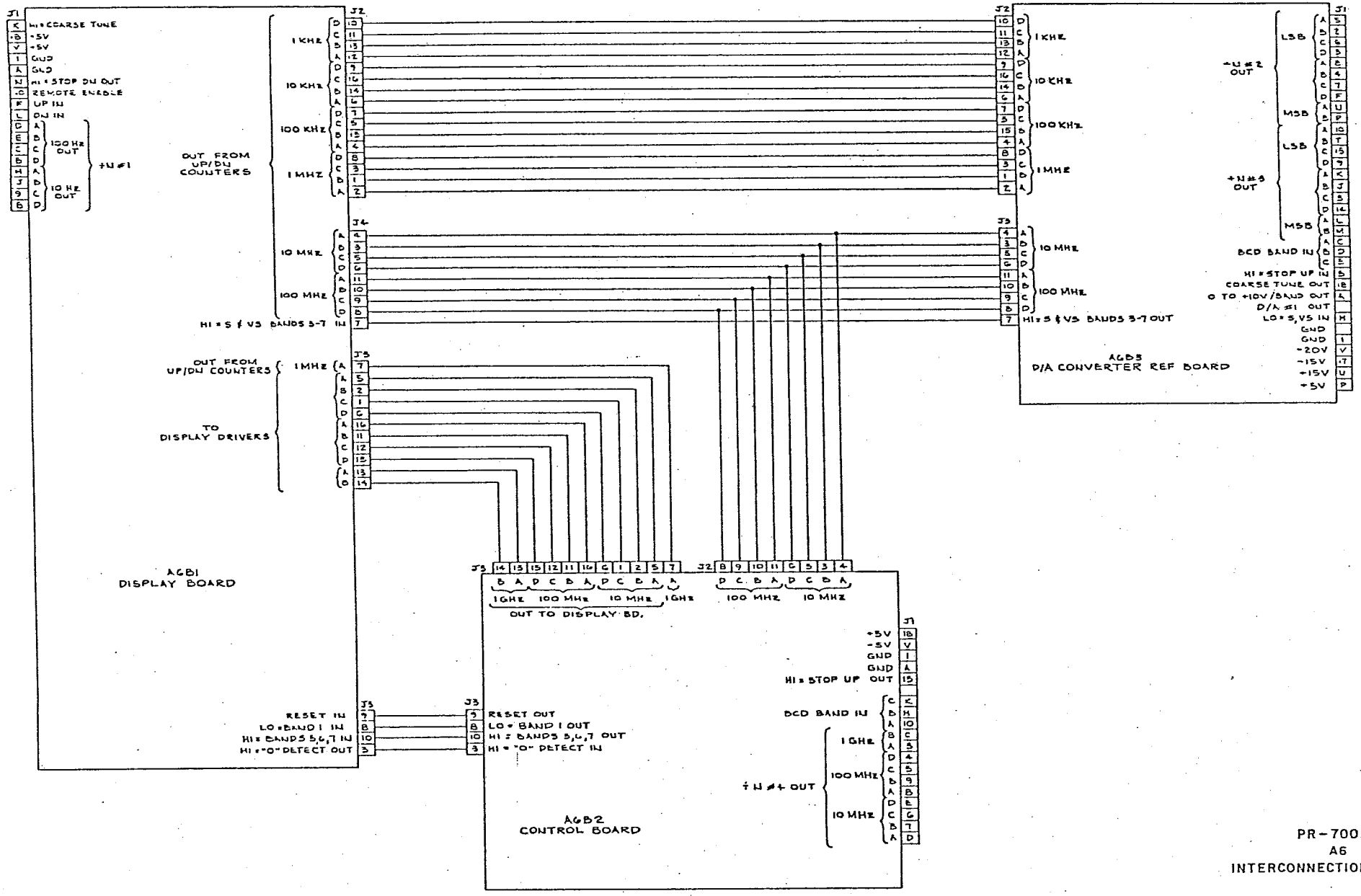

PR-700A
A6
INTERCONNECTION DIAGRA

81060-003

EFF. C.O. 180 10/16/77 B

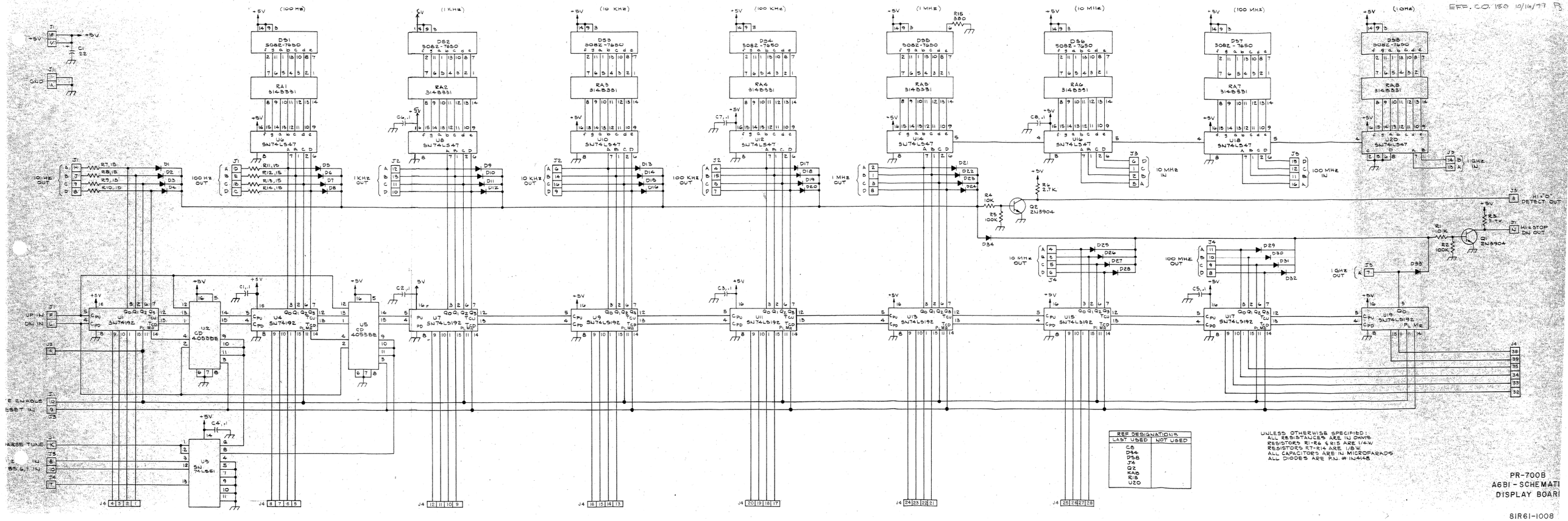

REF DESIGNATIONS	
LAST USED	NOT USED
C8	
D34	
D58	
J4	
Q2	
R48	
R15	
U20	

UNLESS OTHERWISE SPECIFIED:
ALL RESISTANCES ARE IN OHMS
RESISTORS R1-R6 & R15 ARE 1/4-W
RESISTORS R7-R14 ARE 1/8-W
ALL CAPACITORS ARE IN MICROFARADS
ALL DIODES ARE P.N. # 1N4148

PR-700B
A6B1 - SCHEMATI
DISPLAY BOARI

81R61-1008

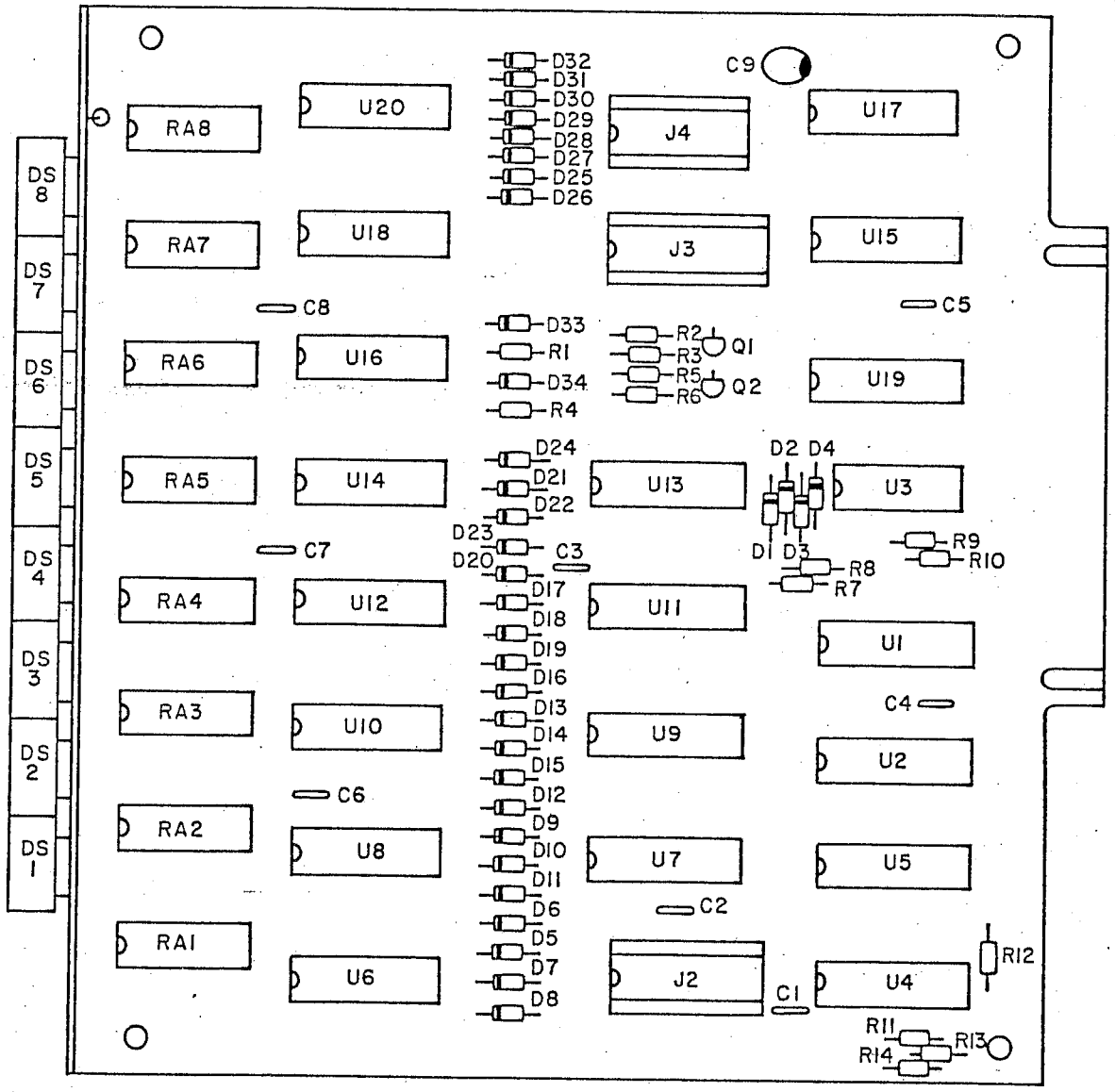

(DO NOT SCALE)

(USED ON UNITS S/N 175 & UP)

PR-700A
A6B1-COMPONENT LOCATION,
DISPLAY

81A61-376

EFF. C.O. 180 10/16/79 PS

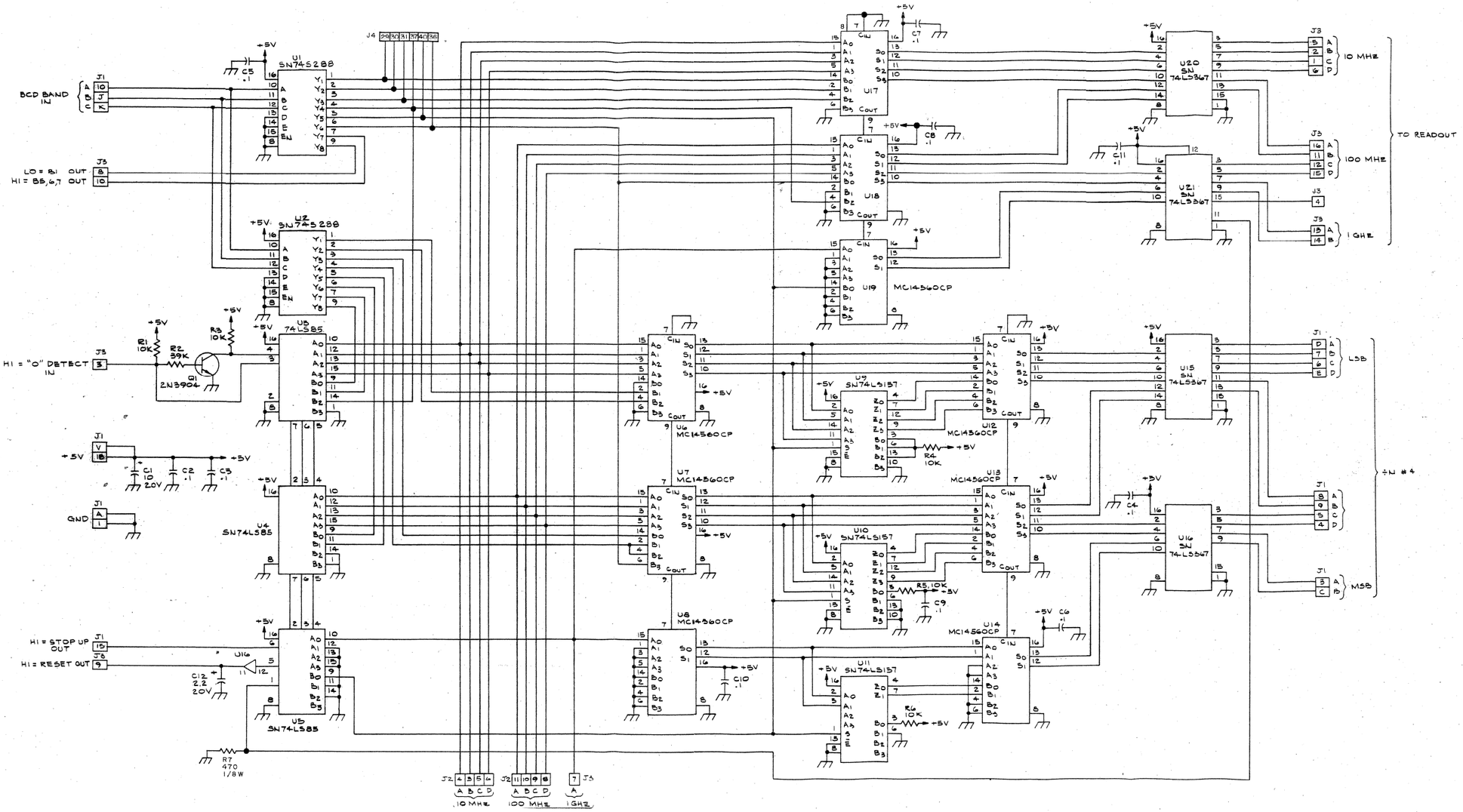

U1 TRUTH TABLE										
BAND	PIN			PIN						
	12	11	10	9	7	6	5	4	3	2	1
1	0	0	1	0	0	0	0	0	0	0	0
2	0	1	0	0	0	0	0	0	0	0	1
3	0	1	1	0	0	0	0	0	0	1	1
4	1	0	0	1	0	0	0	0	1	0	1
5	1	0	1	1	1	1	0	0	1	0	1
6	1	1	0	1	1	0	0	1	1	1	1
7	1	1	1	1	1	0	1	0	0	0	0

U2 TRUTH TABLE										
BAND	PIN			PIN						
	12	11	10	9	7	6	5	4	3	2	1
1	0	0	1	1	0	0	0	X	X	X	X
2	0	1	0	0	1	0	0	X	X	X	X
3	0	1	1	0	1	0	0	1	1	0	1
4	1	0	0	0	0	1	0	1	1	1	0
5	1	0	1	0	1	1	1	0	0	1	0
6	1	1	0	1	1	1	0	1	0	1	0
7	1	1	1	0	0	0	0	0	0	0	0

KEY:
0 = TTL LOW
1 = TTL HIGH
X = DONT CARE

REF DESIGNATIONS	
LAST USED	NOT USED
C12	
J3	
Q1	
R7	
U21	

UNLESS OTHERWISE SPECIFIED:
ALL RESISTANCES ARE IN OHMS
ALL RESISTORS ARE 1/4-W
ALL CAPACITORS ARE IN MICROFARADS

PR-700B
A6B2-SCHEMATIC,
CONTROL BOARD

81R62-1009

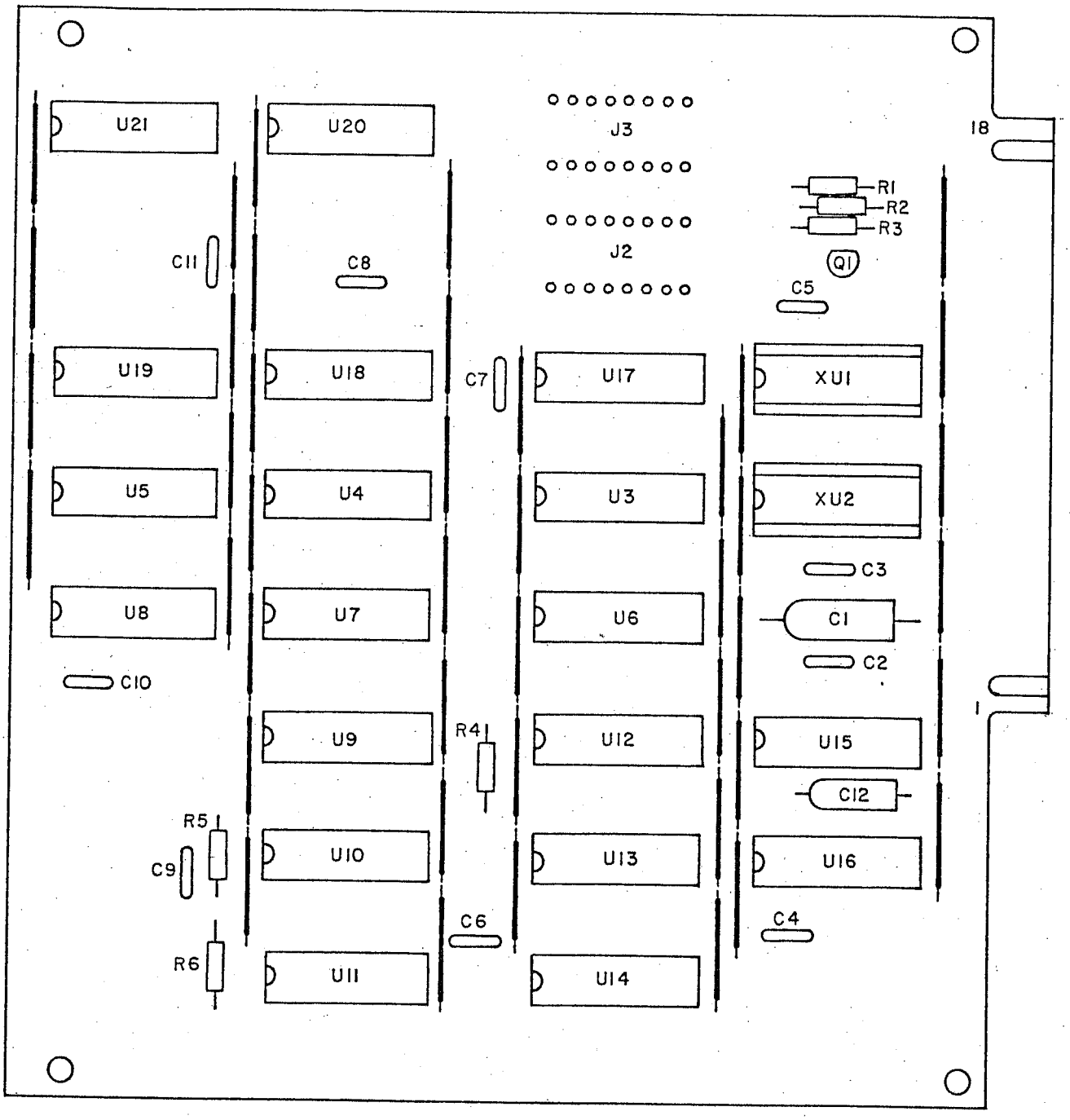

(DO NOT SCALE)

PR-700A
A6B2-COMPONENT LOCATION,
CONTROL BOARD

81A62-377

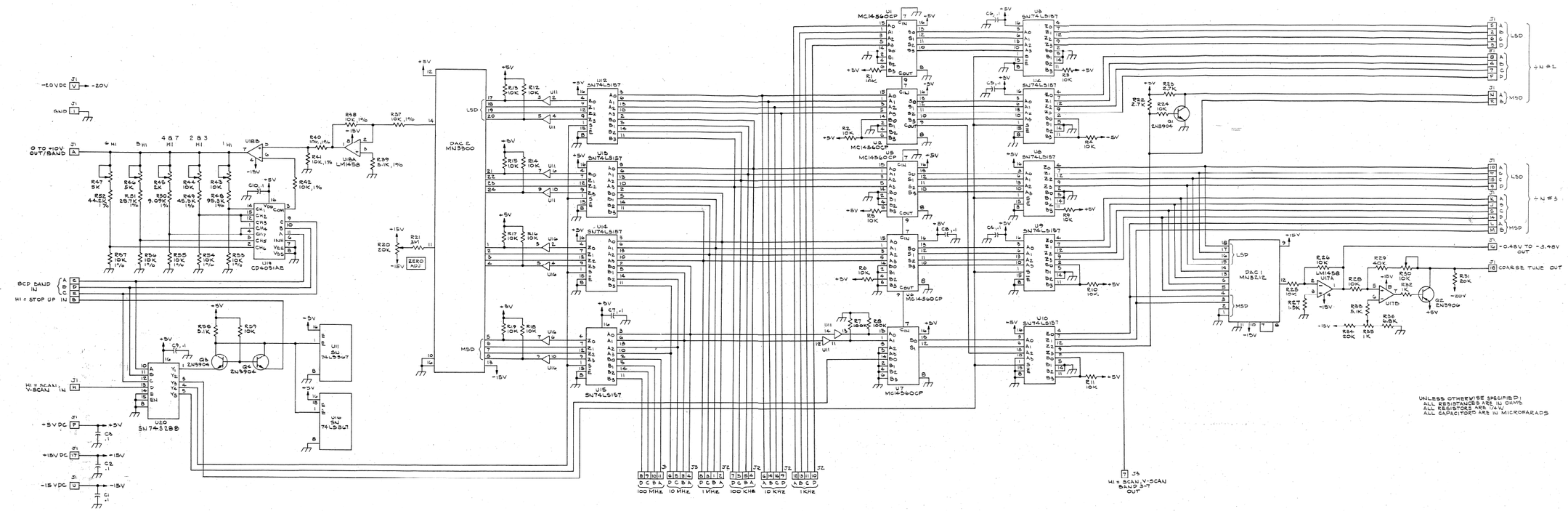

U20 TRUTH TABLE												
	PIN							PIN				
BAND	14	13	12	11	10			5	4	3	2	1
1	0	0	0	0	1			0	1	1	0	0
2	0	0	0	1	0			1	1	1	0	0
3	0	0	0	1	1			1	1	1	1	0
4	0	0	1	0	0			1	1	1	1	1
5	0	0	1	0	1			1	0	1	1	0
6	0	0	1	1	0			1	0	1	1	0
7	0	0	1	1	1			1	0	1	1	1
1	0	1	0	0	1			0	1	1	0	0
2	0	1	0	1	0			1	1	1	0	0
3	0	1	0	1	1			1	1	0	1	0
4	0	1	1	0	0			1	1	0	1	1
5	0	1	1	0	1			1	0	0	1	0
6	0	1	1	1	0			1	0	0	1	0
7	0	1	1	1	1			1	0	0	1	1

SYNTH

SCAN & V-SCAN

KEY:
0 = TTL LOW
1 = TTL HIGH
X = DON'T CARE

REF DESIGNATIONS	
LAST USED	NOT USED
C10 DAC I J5 Q4 R59 U20	

UNLESS OTHERWISE SPECIFIED:
ALL RESISTANCES ARE IN OHMS
ALL RESISTORS ARE 1/4 W.
ALL CAPACITORS ARE IN MICROFARADS

PR-700A
A6B3 - SCHEMATIC,
D/A CONVERTER
REFERENCE BOARD

81R63-038

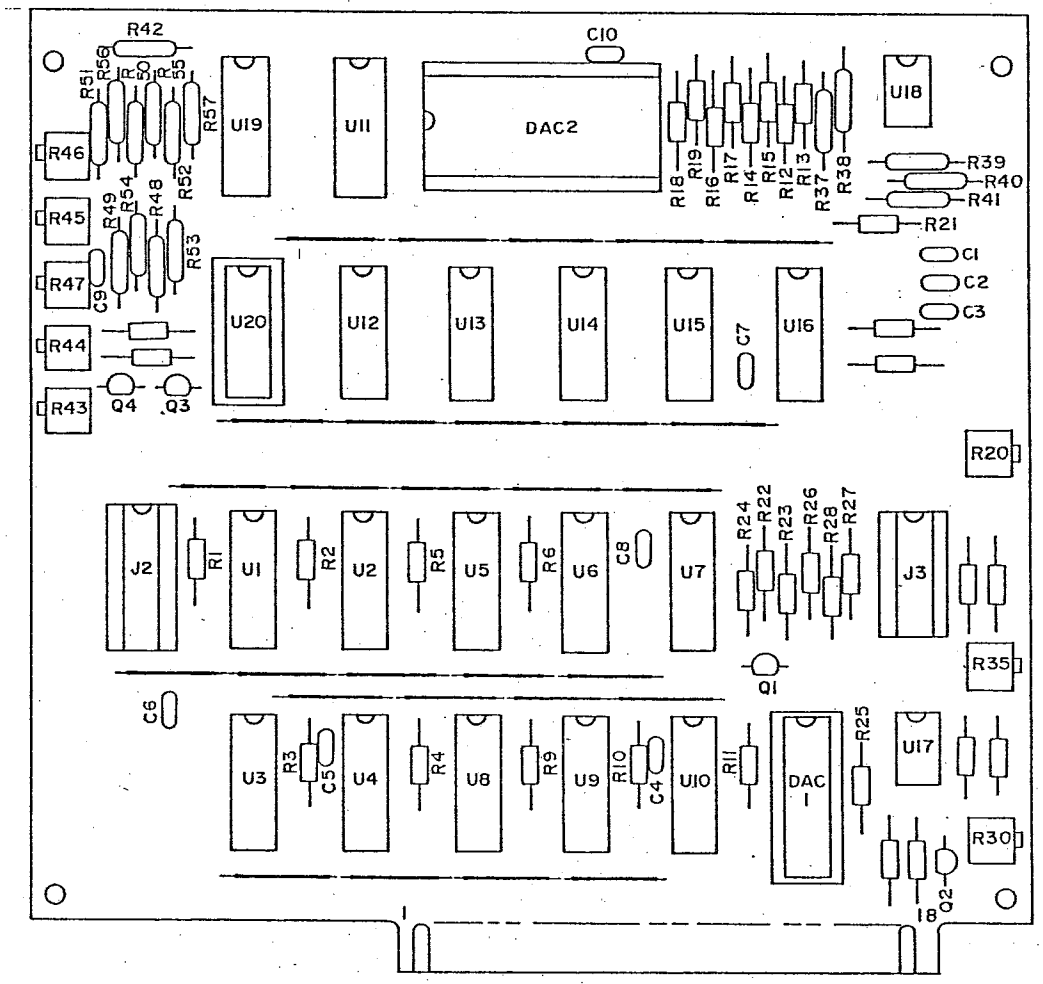

PR-700A
A6B3-COMPONENT LOCATION,
D/A CONVERTER
REFERENCE BOARD

81863-378

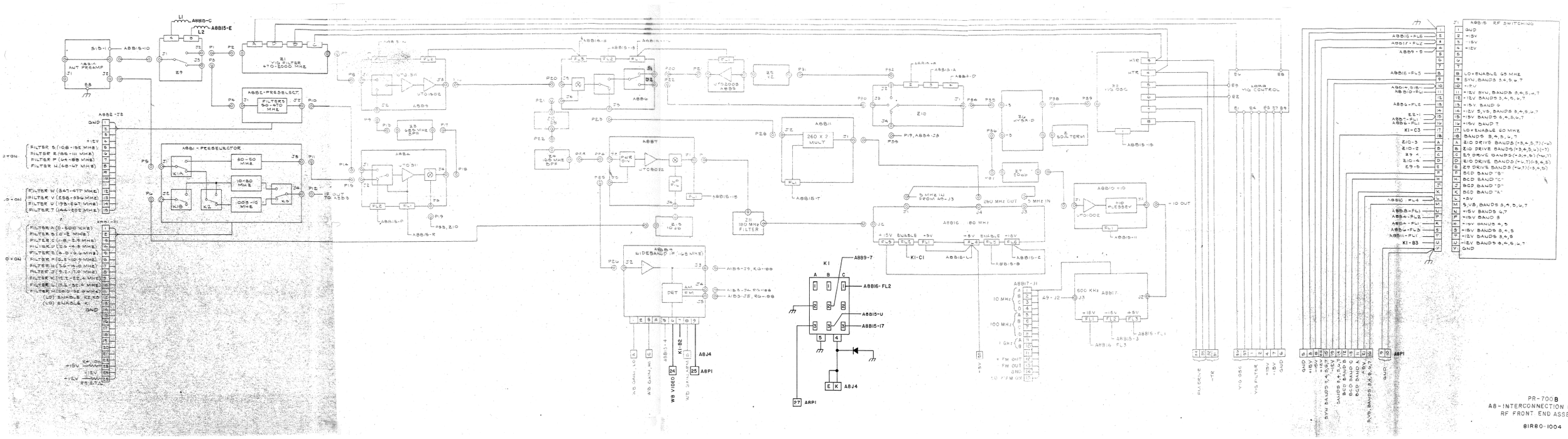
A8B1-A ANT PREAMP
A8B2 - PREBELECT
FILTERS 50-470 MHZ
A8B1 - PREBELECTOR
FILTER S (108-152 MHZ)
FILTER R (86-111 MHZ)
FILTER P (44-88 MHZ)
FILTER U (48-47 MHZ)
FILTER W (347-477 MHZ)
FILTER V (258-356 MHZ)
FILTER T (144-202 MHZ)
FILTER A (0-500 KHZ)
FILTER B (0-2 MHZ)
FILTER C (1.8-2.9 MHZ)
FILTER D (2.6-4.8 MHZ)
FILTER E (4.0-6.6 MHZ)
FILTER F (6.5-10.9 MHZ)
FILTER G (10-16.0 MHZ)
FILTER J (9.2-15.0 MHZ)
FILTER K (13.2-22.4 MHZ)
FILTER L (18.2-32.8 MHZ)
FILTER M (30.0-52.0 MHZ)
(LO) ENABLE K2, K3
(LO) ENABLE K1
GND
+15V
-15V
+12V
A8B9 WIDEBAND IF (16.5 MHZ)
DET
AM
FM
A8B9-J3, RQ-188
A8B9-J4, RQ-188
A8B9-J5, RQ-188
A8B9 GAIN LO
A8B9 GAIN HI
A8B9-4
WB VIDEO
K1-B2
WB SELECT
A8J4
A8P1
A8B11 260 X 2 MULT
A8B7 PWR DIV
A8B6
A8B5
A8B16 180 MHZ
5 MHZ IN FROM A8-J3
180 MHZ OUT
5 MHZ IN
A8B10-10
A10 PLESSEY
-10 OUT
A8B17-J1
10 MHZ
100 MHZ
1 GHZ
+FM OUT
FM OUT
GND
+10 FM ON
500 KHZ
A8B17
A8B15 RF SWITCHING
GND
+15V
-15V
+12V
LO+ENABLE 50 MHZ
SYN. BANDS 3,4,5 & 7
-12V
-12V SYN. BANDS 3,4,5,6,7
-12V BANDS 3,4,5,6,7
+15V BAND 6
-12V 5,VS, BANDS 3,4,5,6,7
+15V BANDS 3,4,5,6,7
+15V BAND 7
LO+ENABLE 60 MHZ
BANDS 3,4,5,6,7
Z10 DRIVE BANDS (-3,4,5,7)(-6)
Z10 DRIVE BANDS (-3,4,5,6)(-7)
Z9 DRIVE BANDS (-3,4,5)(-6,7)
Z10 DRIVE BANDS (-6,7)(-3,4,5)
Z9 DRIVE BANDS (-6,7)(-3,4,5)
BCD BAND "B"
BCD BAND "C"
BCD BAND "D"
BCD BAND "A"
-15V
5,VS, BANDS 3,4,5,6,7
+15V BANDS 4,7
+15V BAND 5
+15V BANDS 4,5
+15V BANDS 3,4,5
-12V BANDS 3,4,5
-12V BANDS 3,4,5,6,7
GND
A8B16-FL5
A8B17-FL2
A8B9-5
A8B16-FL3
A8B14-3(D)
A8B10-FL1
A8B6-FL2
Z2-1
A8B7-FL1
A8B6-FL1
K1-C3
Z10-3
Z10-2
Z9-4
Z10-4
Z9-5
A8B10-FL4
A8B3-FL1
A8B4-FL2
A8B4-FL1
A8B6-FL3
A8B11-FL1
K1-B3
A8P1
PR-700B
A8-INTERCONNECTION DIAGRAM
RF FRONT END ASSEMBLY
81R80-1004

EFF. PER C.O. 218 6/3/80
EFF. C.O. 228 6/24/81
REV PER C.O. 356 2/2/82
REV. PER C.O. 437 8/9/83

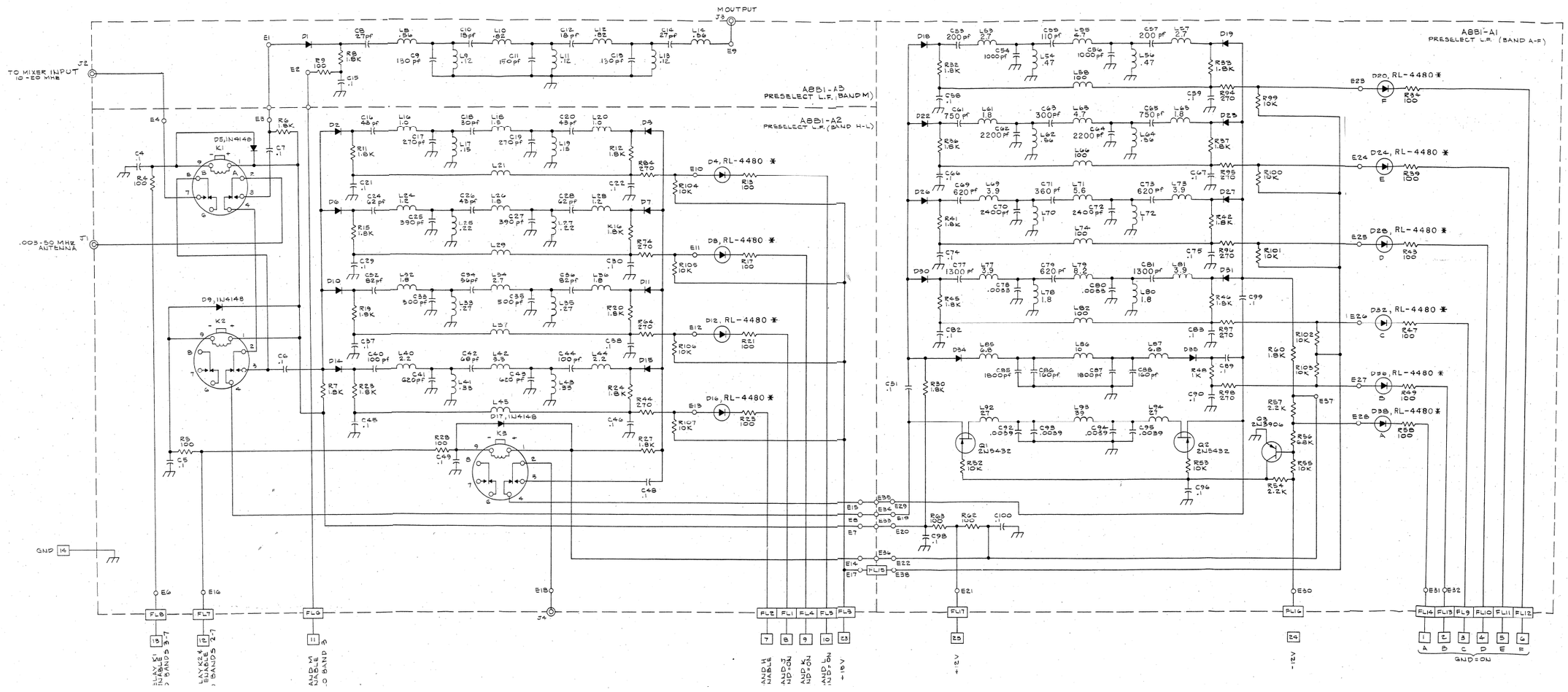

REF DESIGNATIONS	
LAST USED	NOT USED
C100	
D38	
K3	
L94	
Q3	
R107	
FL17	

UNLESS OTHERWISE SPECIFIED:
ALL RESISTORS ARE 1/4 W
ALL RESISTANCES ARE IN Ω
ALL CAPACITORS ARE IN μF
ALL INDUCTORS ARE IN μH
ALL DIODES ARE PN # MPN-5402

* CQV10-3 MAY BE USED IN PLACE OF RL-4480

PR-700A
A8B1-SCHEMATIC,
PRESELECTOR
LOW FREQUENCY

81R81-048

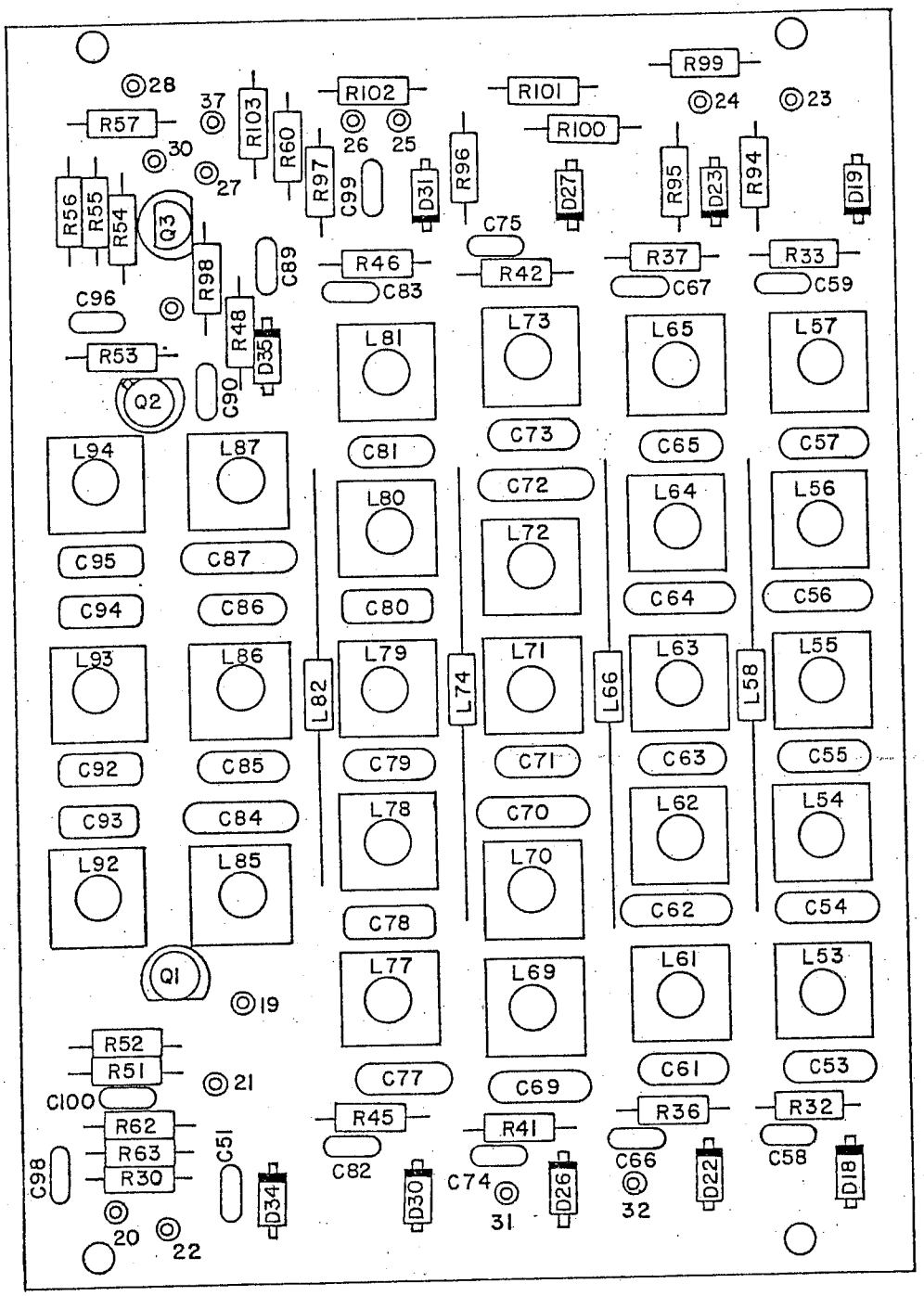

PR-700A
COMPONENT LAYOUT, A8B
PRE-SELECTOR L.F. BD #
81A81-316

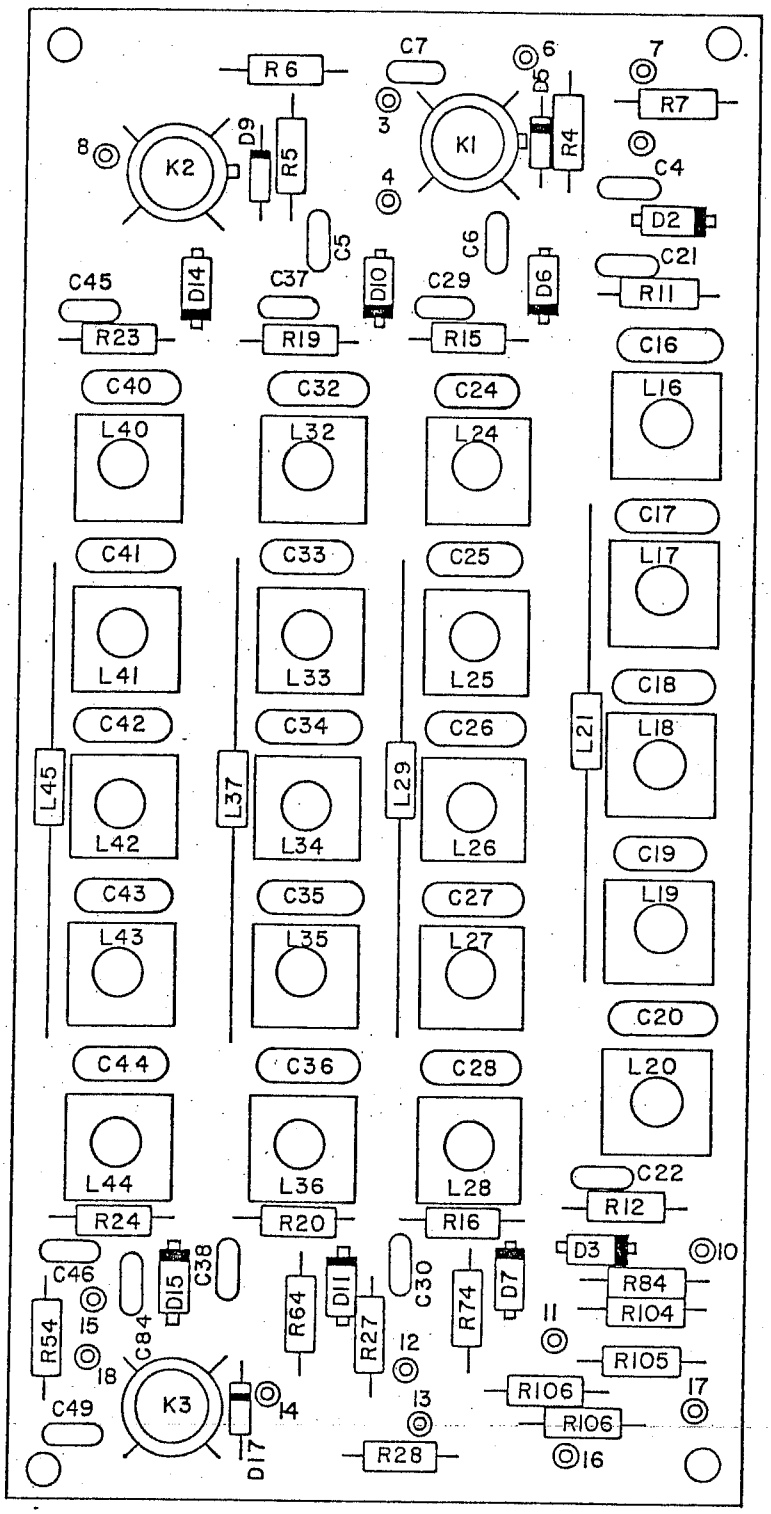

PR-700A
COMPONENT LAYOUT, A8B1A2
PRE-SELECTOR L.F. BD#2
81B81-317

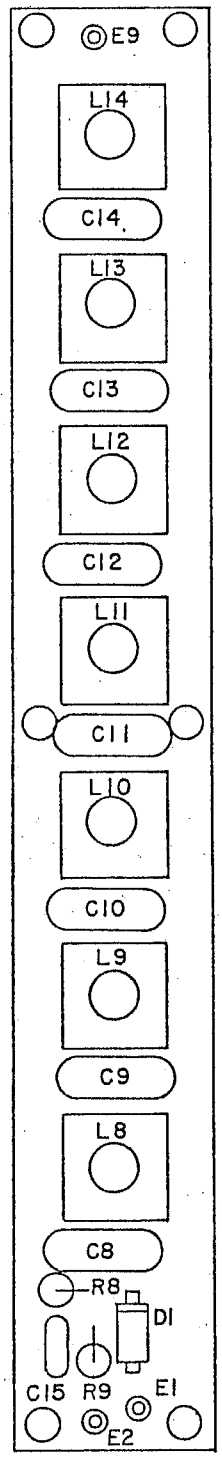

PR-700A
COMPONENT LAYOUT, A8B1A3
L. F. PRE-SELECTOR BD#3
81A81-318

REV PER C.O. 356 2/2/82 PS

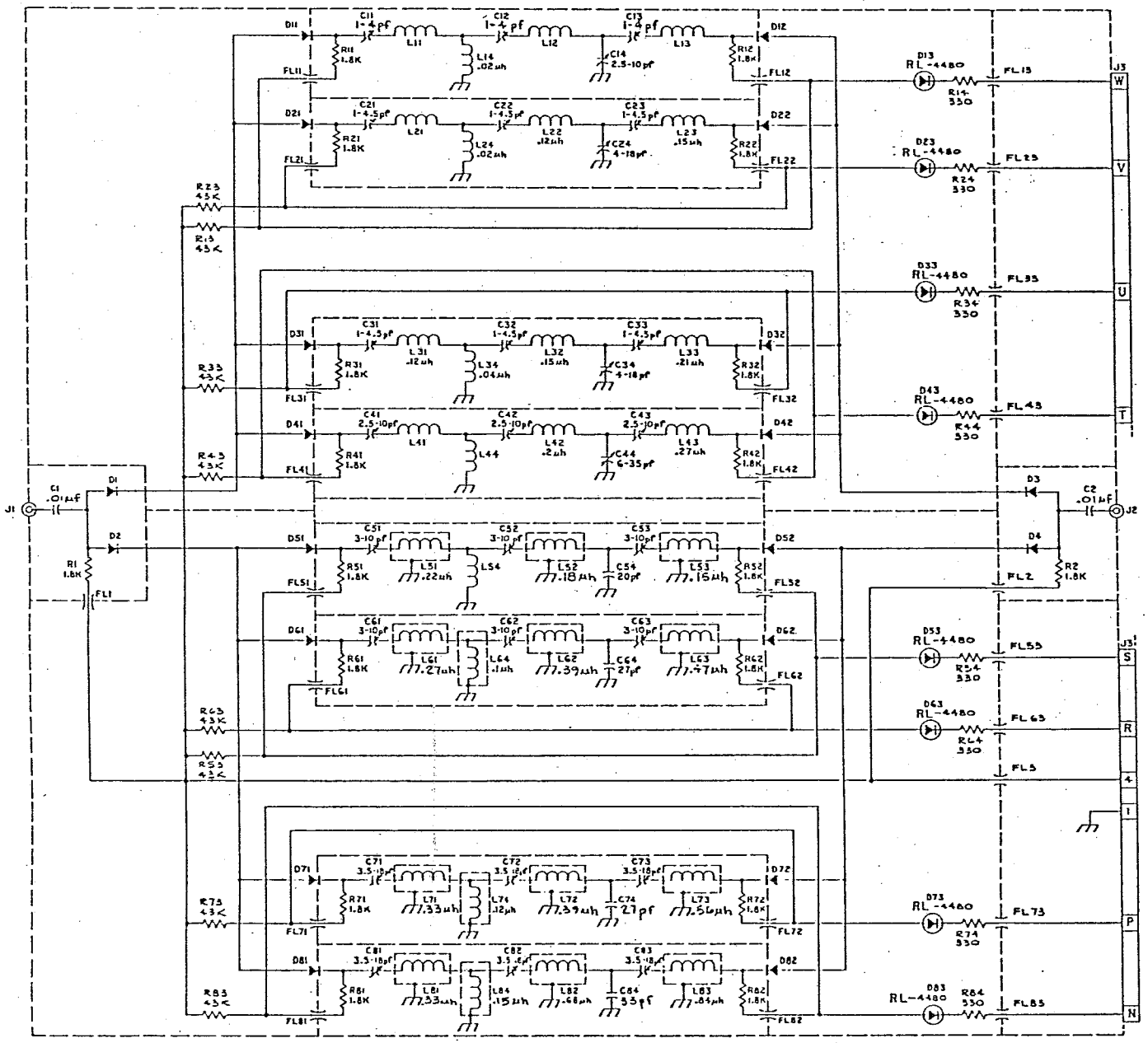

UNLESS OTHERWISE SPECIFIED:
ALL RESISTORS 1/4 W
ALL RESISTANCES IN OHMS
ALL DIODES ARE PART NO. MPN-3402

PR-700A
A8B2 - SCHEMATIC,
PRESELECTOR, HIGH FREQUENC

81D82-016

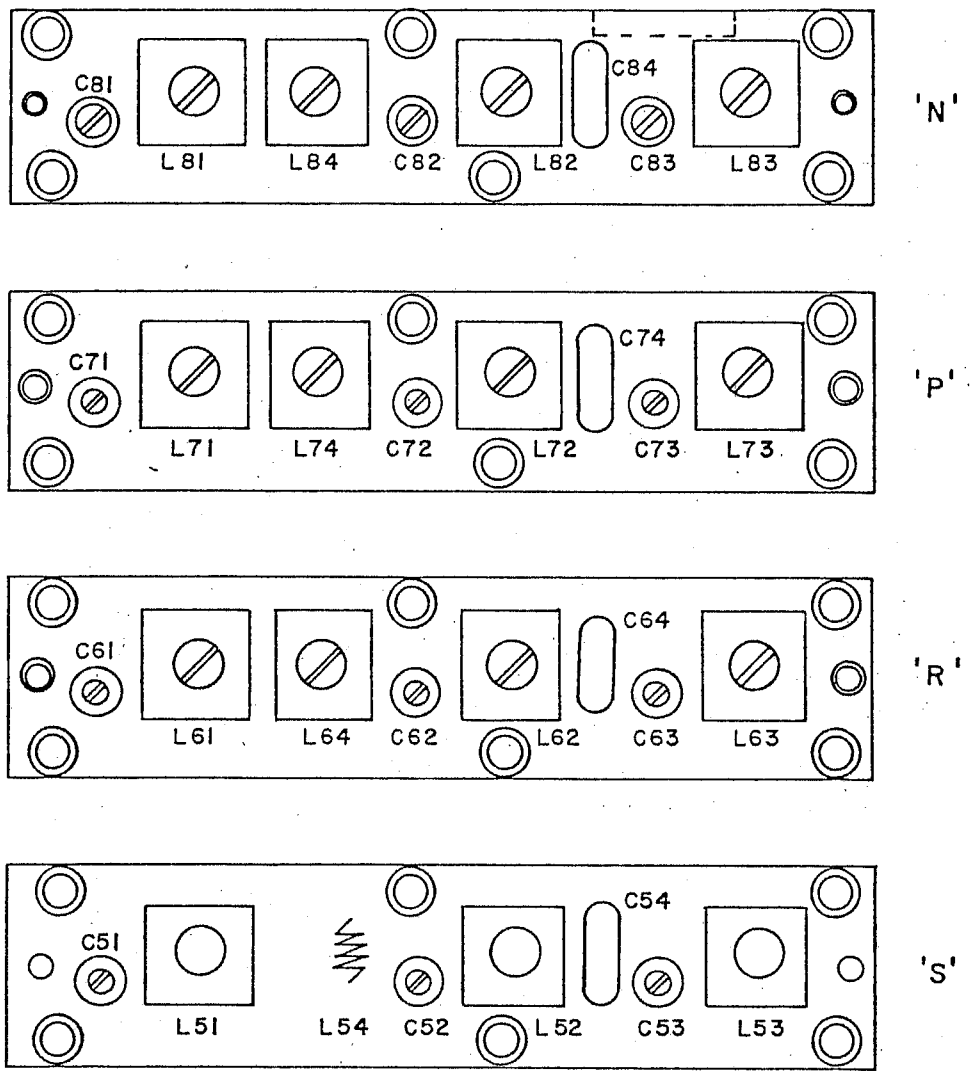

PR-700A
COMPONENT LAYOUT, A8B2
PRE-SELECTOR H.F. BDS (N-S)
81B82-313 SH 1 OF 2

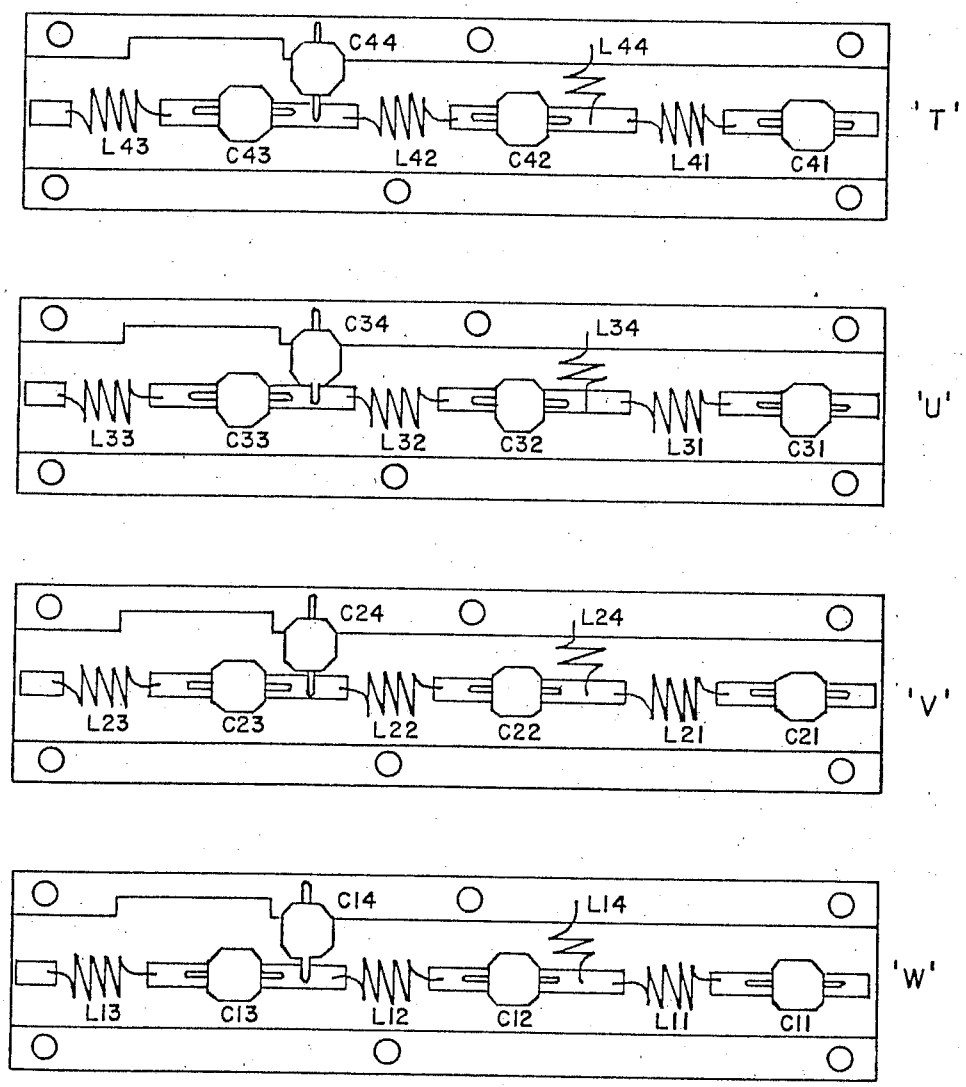

PR-700A
COMPONENT LAYOUT, A8B2
PRE-SELECTOR H.F. BDS (T-W)
81B82-313 SH 2 OF 2

EFF. CO. 197 1/8/80 PS.

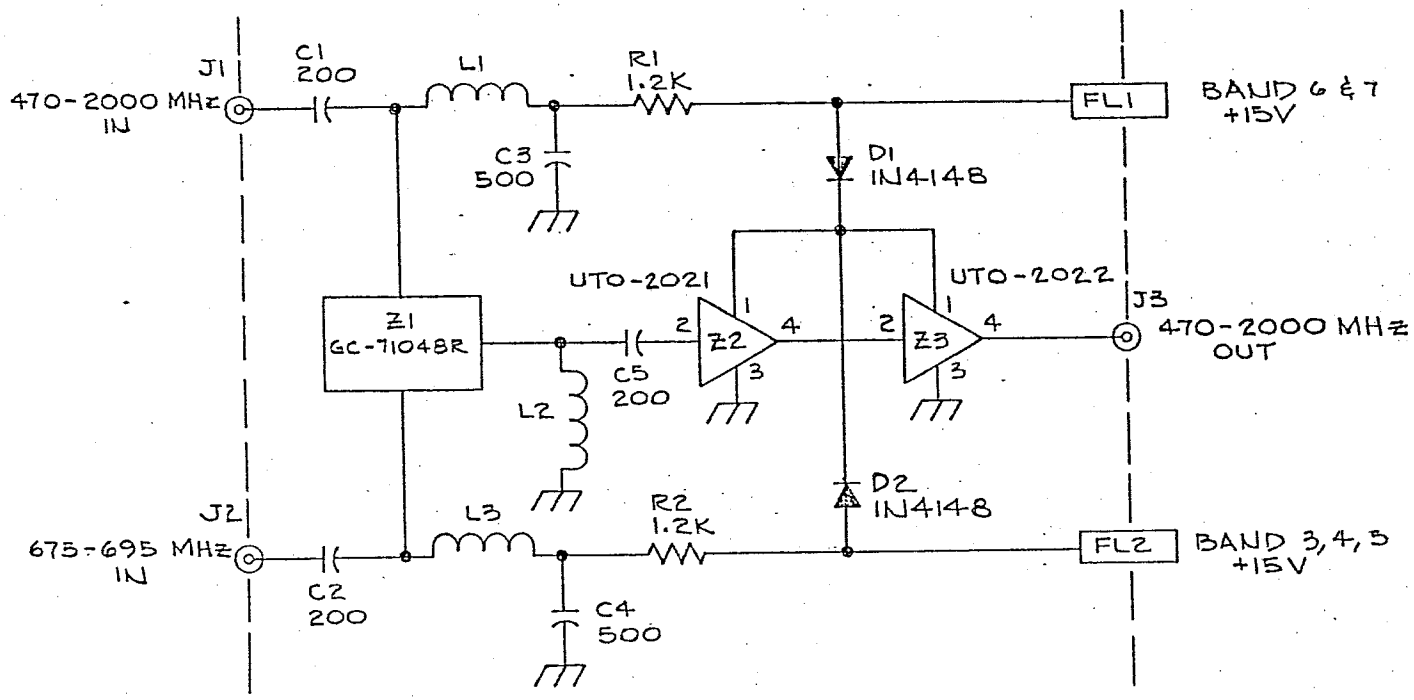

REF DESIGNATIONS	
LAST USED	NOT USED
C5 D2 FL2 J3 L3 R2 Z3	

UNLESS OTHERWISE SPECIFIED:
ALL RESISTORS ARE 1/4 W
ALL CAPACITORS ARE IN PICAFARADS

PR-700A
A8B3 - SCHEMATIC,
470-2000 MHz AMPLIFIER/SWIT

81883-030

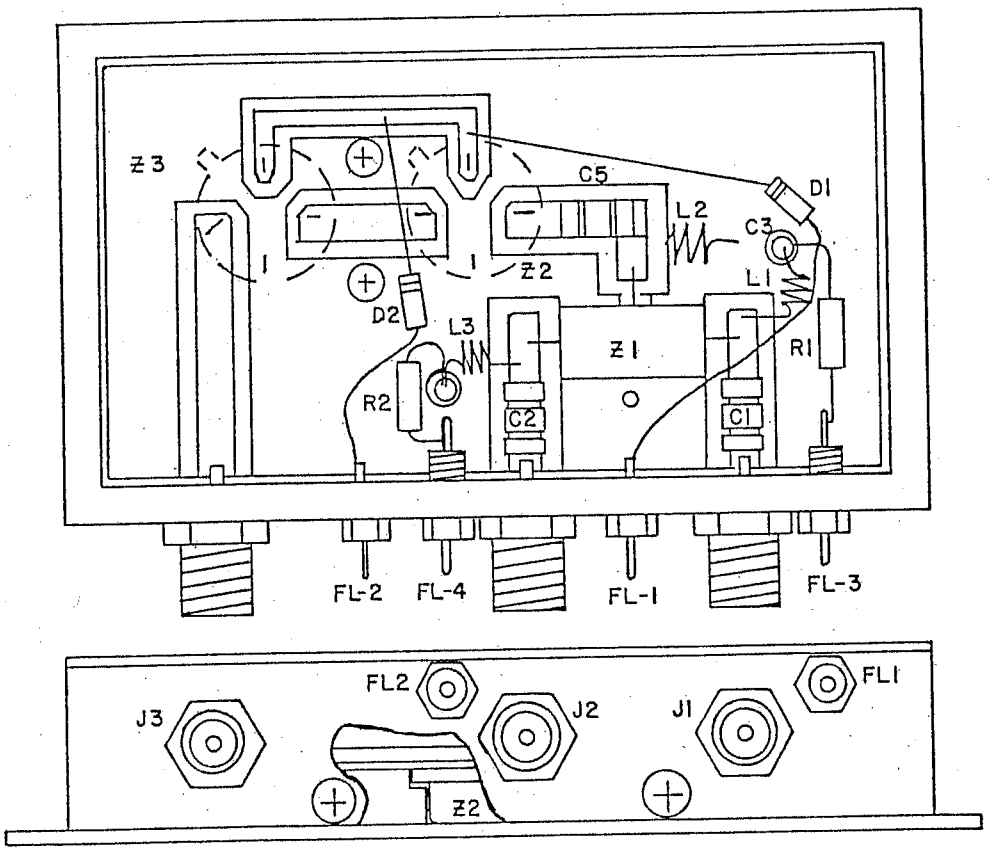

PR700A, PR700B, PR707
A8B3-COMPONENT LOCATION
470 TO 2K MHz AMP/SWITCH

81A83-346

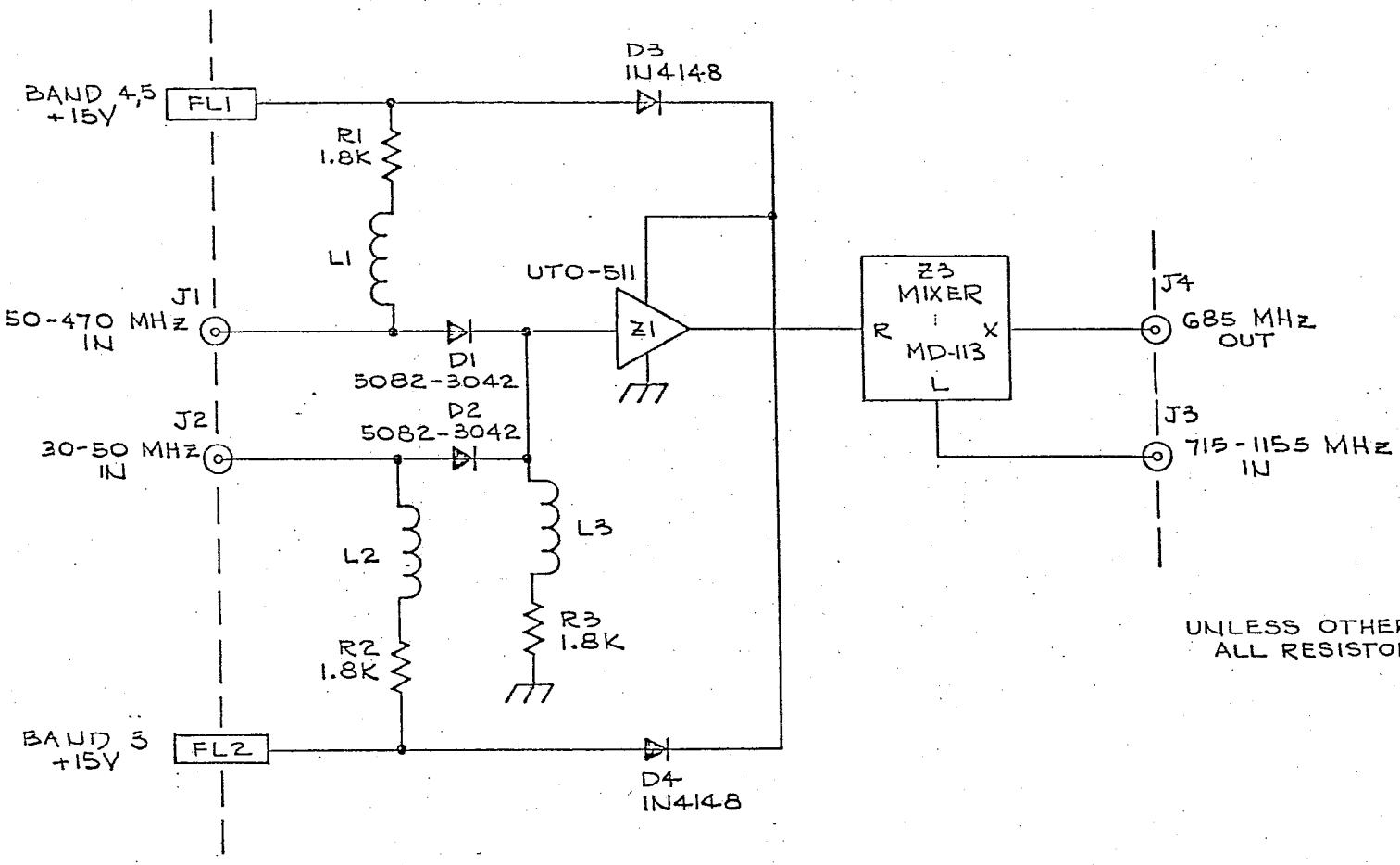

UNLESS OTHERWISE SPECIFIED:
ALL RESISTORS ARE 1/4 W

REF DESIGNATIONS	
LAST USED	NOT USED
D4 FL2 J4 L3 R3 Z3	Z2

PR-700A
A8B4 - SCHEMATIC,
30-470 MHz
AMPLIFIER/SWITCH/MIXE
81B84-031

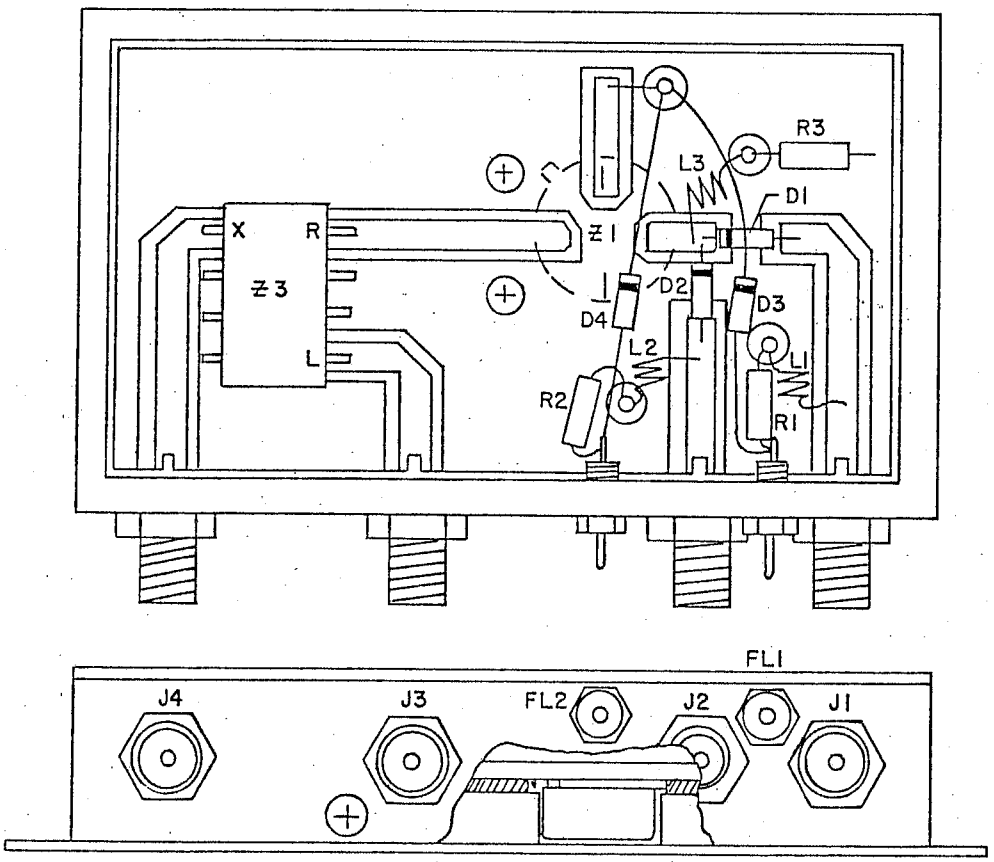

PR-700A
A8B4-COMPONENT LOCATION
30-470 MHz AMP/SW/MIXER
81A84-347

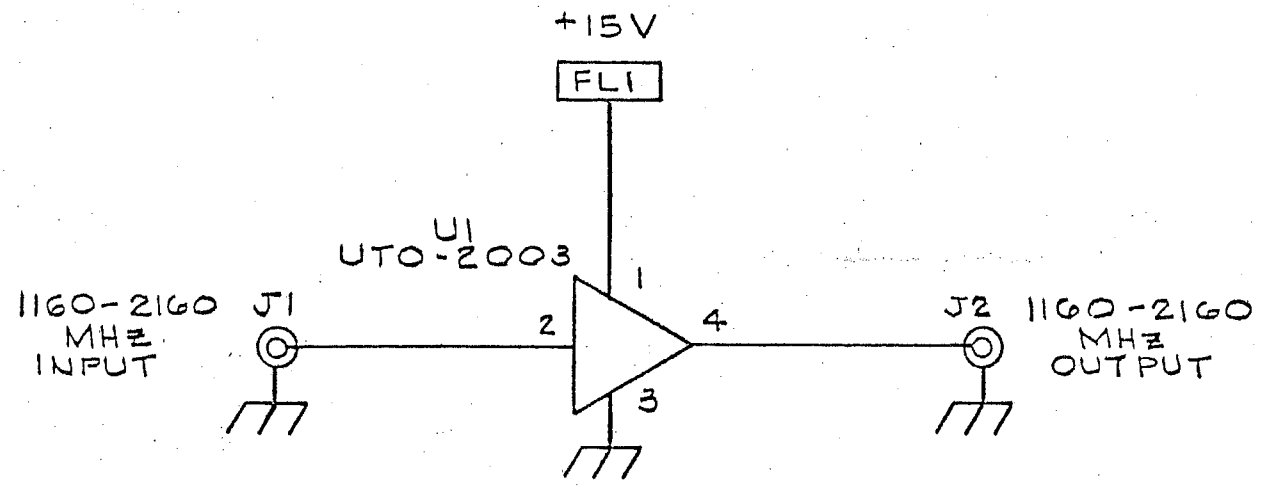

PR-700A
A8B5-SCHEMATIC,
1-2 GHz AMPLIFIER

81A85-050

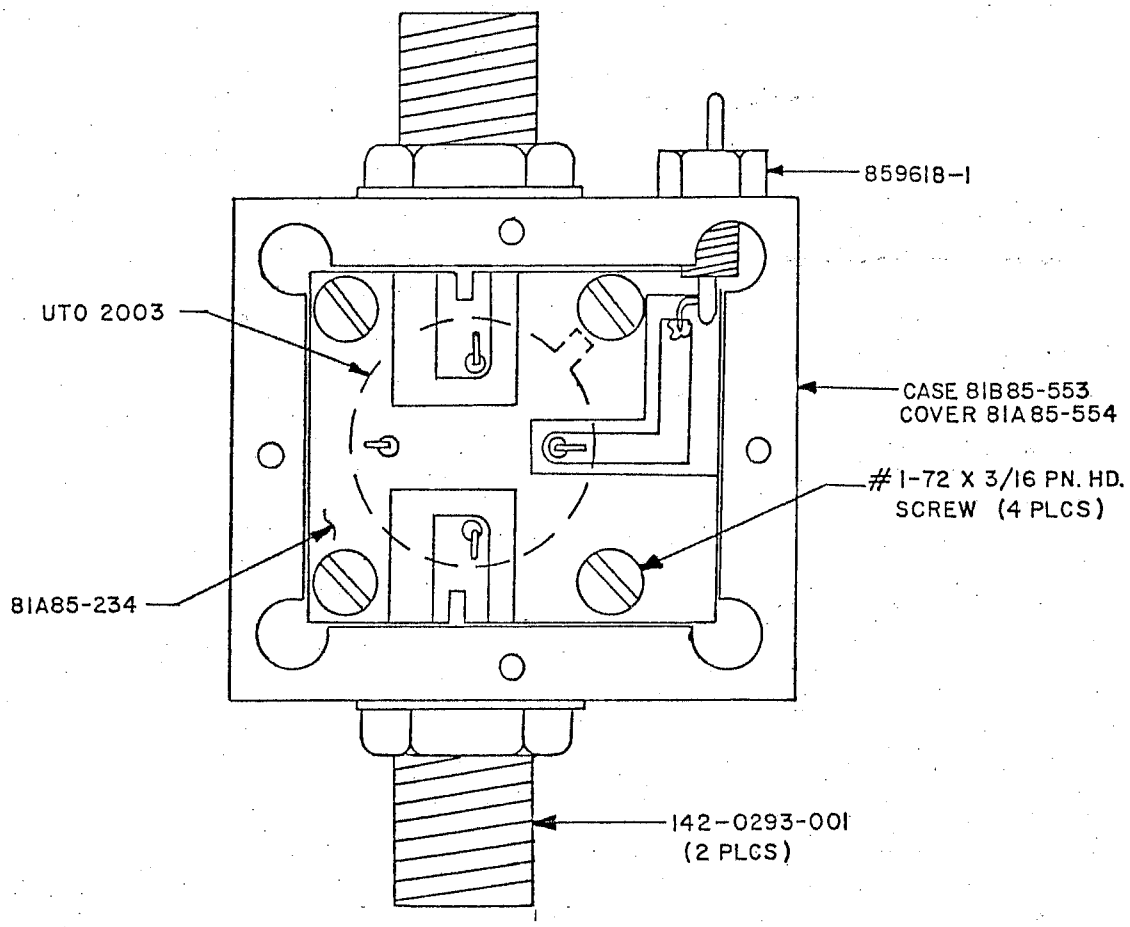

PR-700A
A8B5-COMPONENT LOCATION
1-2 GHz AMPLIFIER

81A85-348

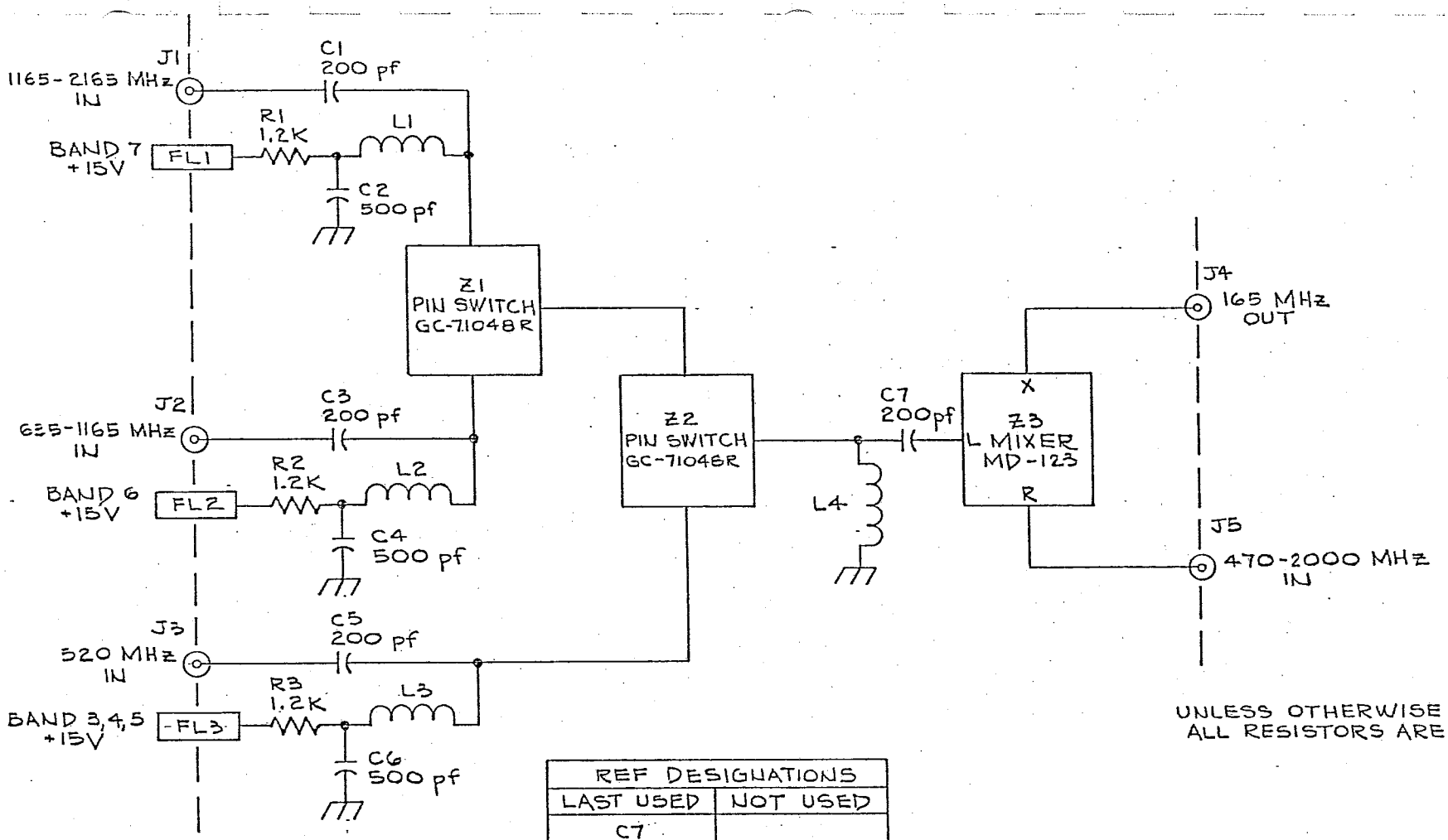

UNLESS OTHERWISE SPECIFIED:
ALL RESISTORS ARE 1/4-W

REF DESIGNATIONS	
LAST USED	NOT USED
C7 FL2 J5 L4 R3 Z3	

USED ON UNITS
S/N 115 AND S/N 126 AND

PR-700A
A8B6-SCHEMATIC,
LO SWITCH/MIXER

81B86-032

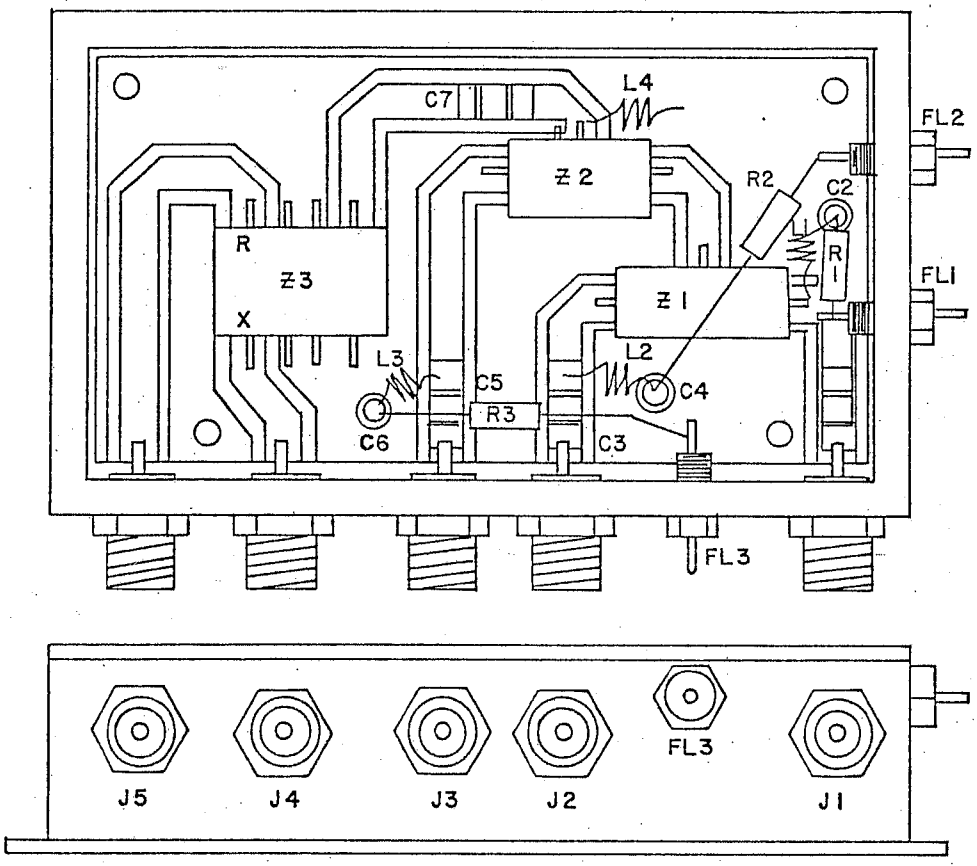

(USED ON UNITS S/N 115 & 126 & UP)

PR-700A
A8B6-COMPONENT LOCATION
L.O. SWITCH/MIXER ASS'Y

81A86-349

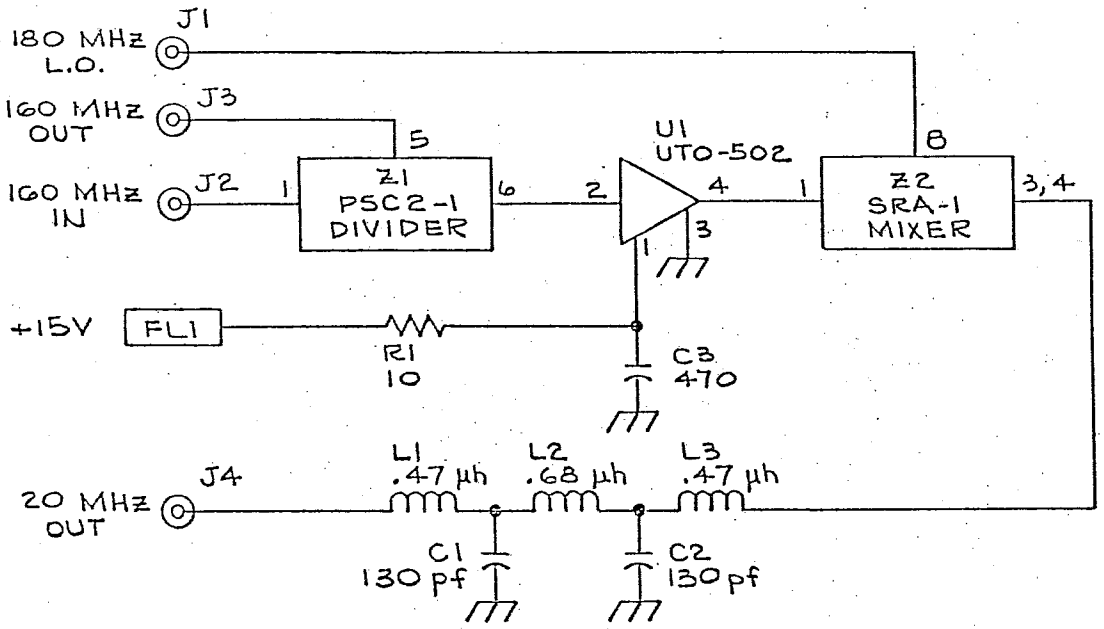

UNLESS OTHERWISE SPECIFIED:
ALL RESISTORS ARE 1/4 W
ALL RESISTANCES ARE IN OHMS
ALL CAPACITORS ARE IN MICROFARADS

REF DESIGNATIONS	
LAST USED	NOT USED
C3	
FL1	
J4	
L3	
R1	
U1	
Z2	

PR-700A
A8B7 - SCHEMATIC,
160 MHz DIVIDER/MIXER/L

81B87-028

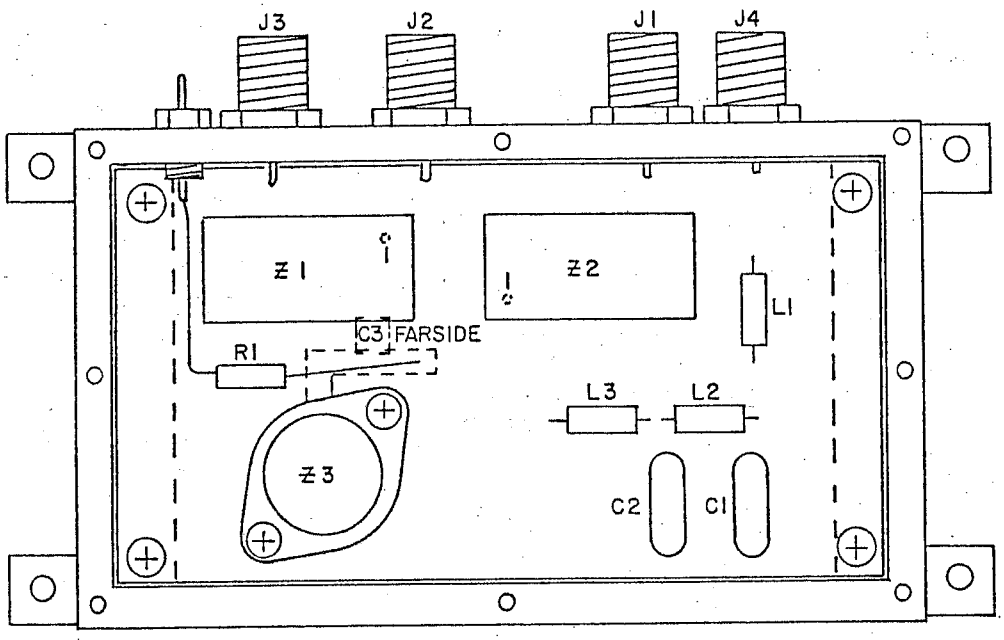

PR-700A
A8B7-COMPONENT LOCATION
160 MHz DIVIDER/MIXER/LPF ASS'Y
81A87-350

EFF. C.O. 213 6-2-90 PS
REV PER C.O. 257 2-2-82 PS

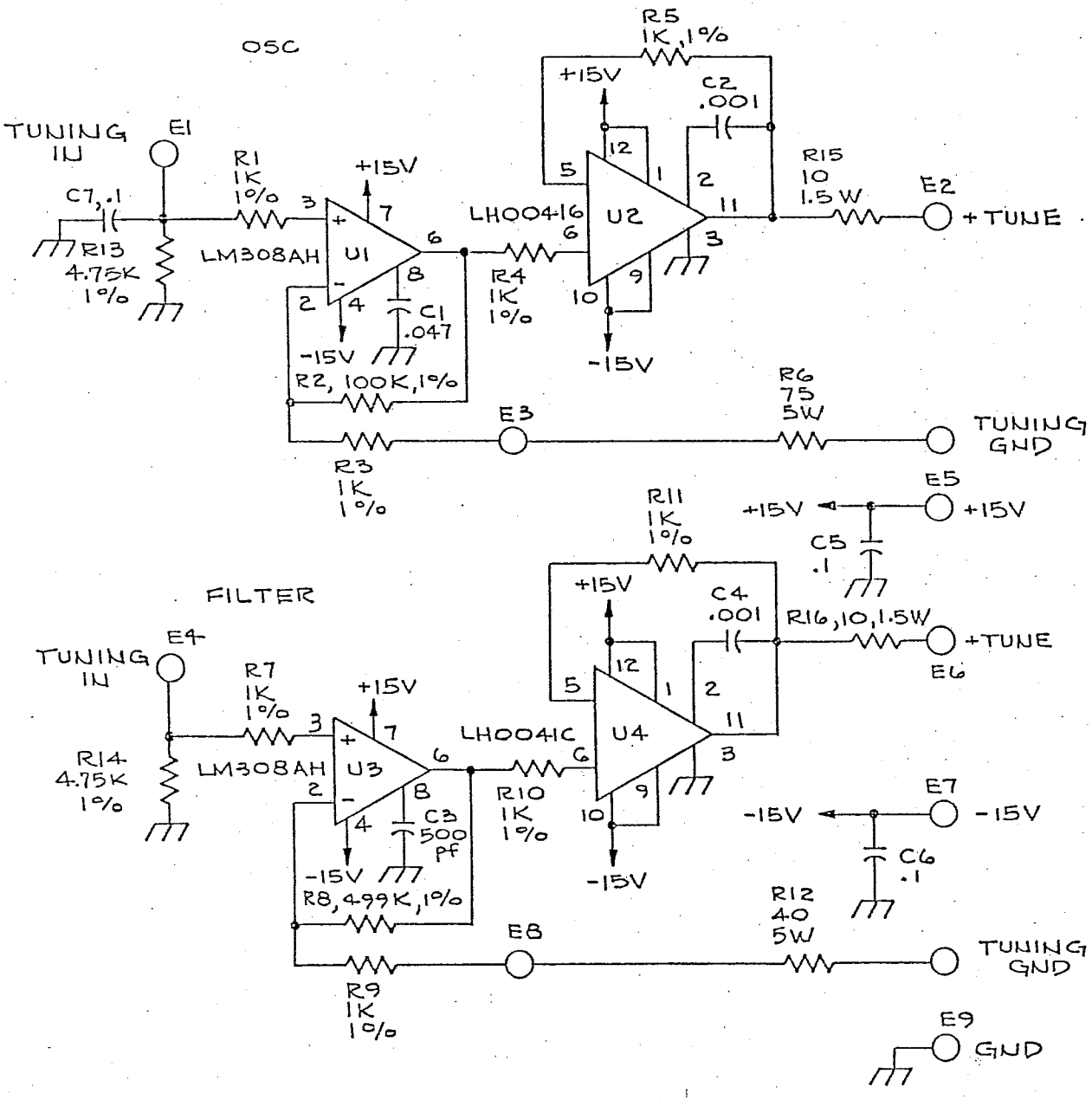

REF DESIGNATIONS	
LAST USED	NOT USED
C7 E9 R16 U4	

UNLESS OTHERWISE SPECIFIED:
ALL RESISTANCES ARE IN OHMS
ALL RESISTORS ARE 1/4W
ALL CAPACITORS ARE IN MICROFARADS

PR-700A
A8B8 - SCHEMATIC,
YIG CONTROLLER

81B88-023

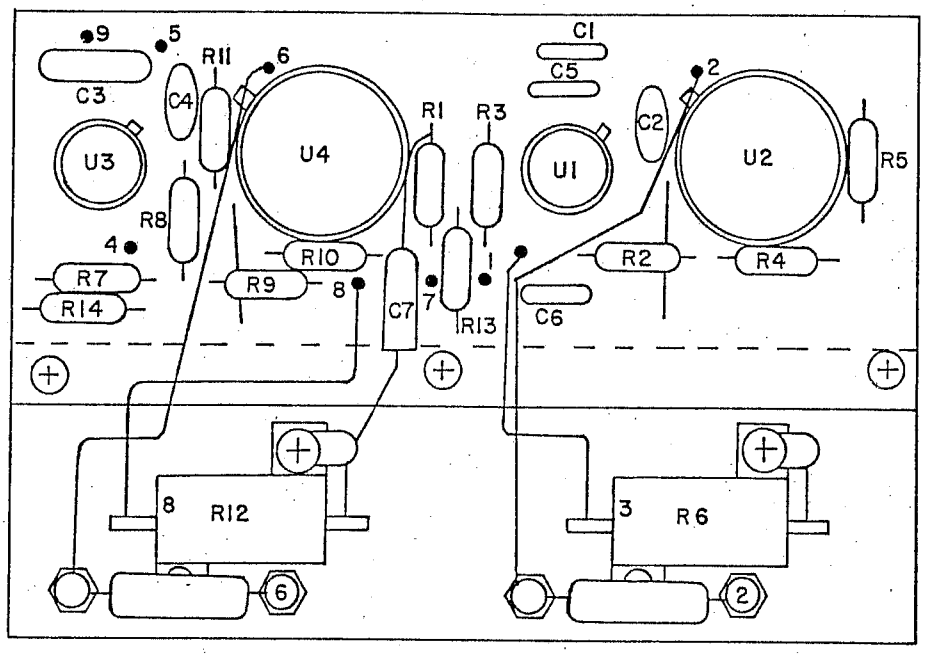

PR700A
A8B8-COMPONENT LOCATION
YIG CONTROLLER

81A88-351

CO NO 191 1/7/80 PS
CO NO 425 2/10/83 WMW
CO NO 451 10/20/83 WMW
CO NO 468 1/25/84 WMW
CO NO 534 4/30/85 WMW

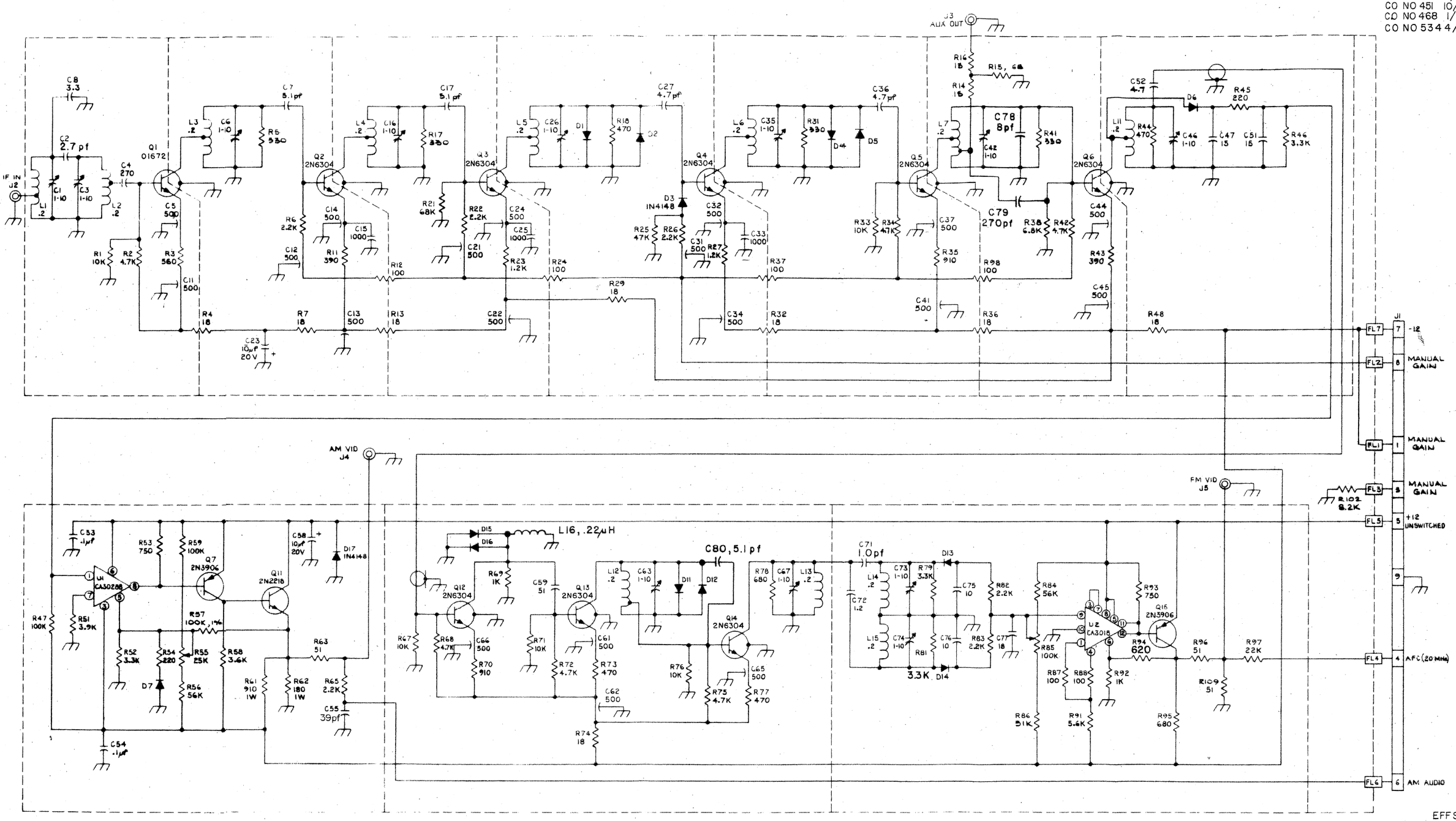

REF DESIGNATIONS			
LAST USED	NOT USED	LAST USED	NOT USED
L16	L8, 9, 10	C81	C9, 10, 18, 19, 20, 28, 29, 30, 38, 39, 40, 48, 49, 50, 56, 57, 60, 68, 69, 70, 73, 74
Q16	Q8, 9, 10	R105	R8, 10, 19, 20, 28, 30, 39, 40, 49, 50, 60, 64, 80, 89, 90, 99, 100, 101, 106
D17	D10, 14		
J5			
FL8			
U102	U1 - 13		

UNLESS OTHERWISE SPECIFIED:
ALL RESISTANCES ARE IN OHMS
ALL RESISTORS ARE 1/4 W
ALL CAPACITORS ARE IN MICROFARADS
ALL DIODES ARE P.N. # 9 5082 2810

EFFS/N 260

PR-700A
A8B9 - SCHEMATIC,
WIDEBAND IF

81B89-017

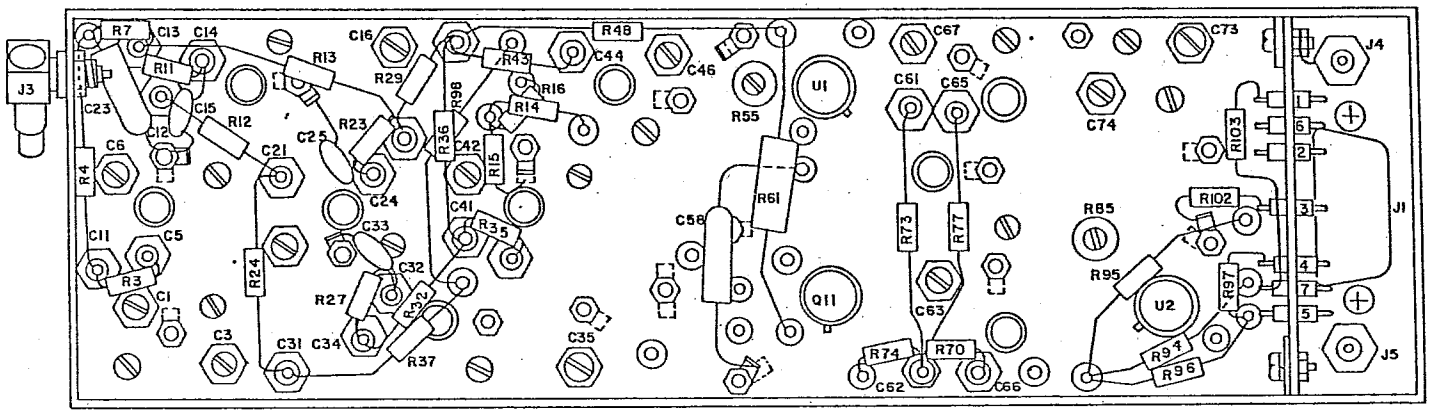

TOP VIEW

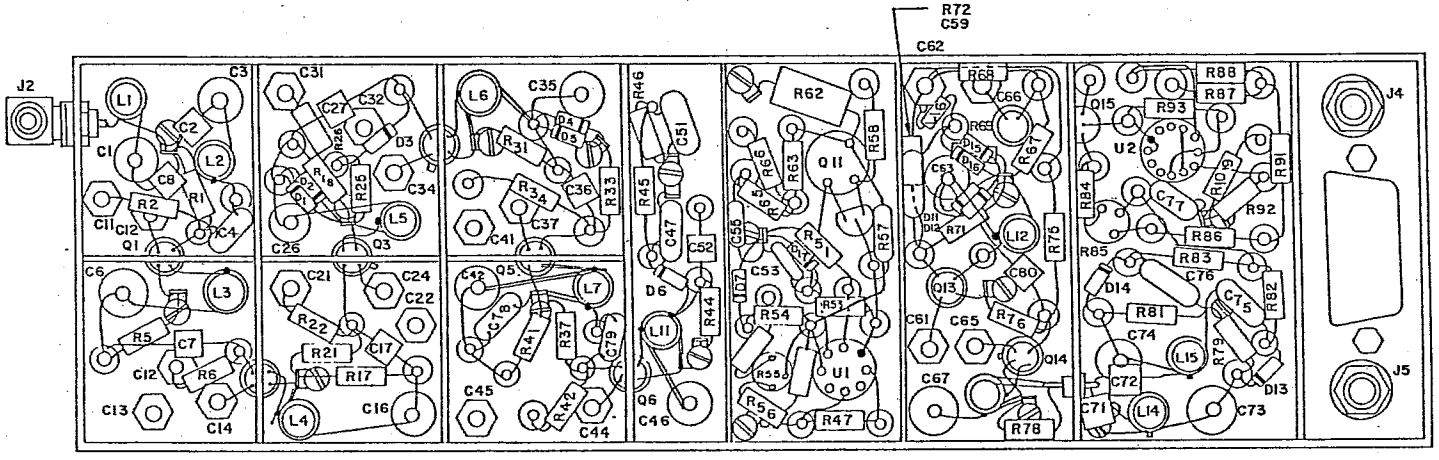

PR-700A
A889-COMPONENT LOCATION,
WIDEBAND IF
81889-304

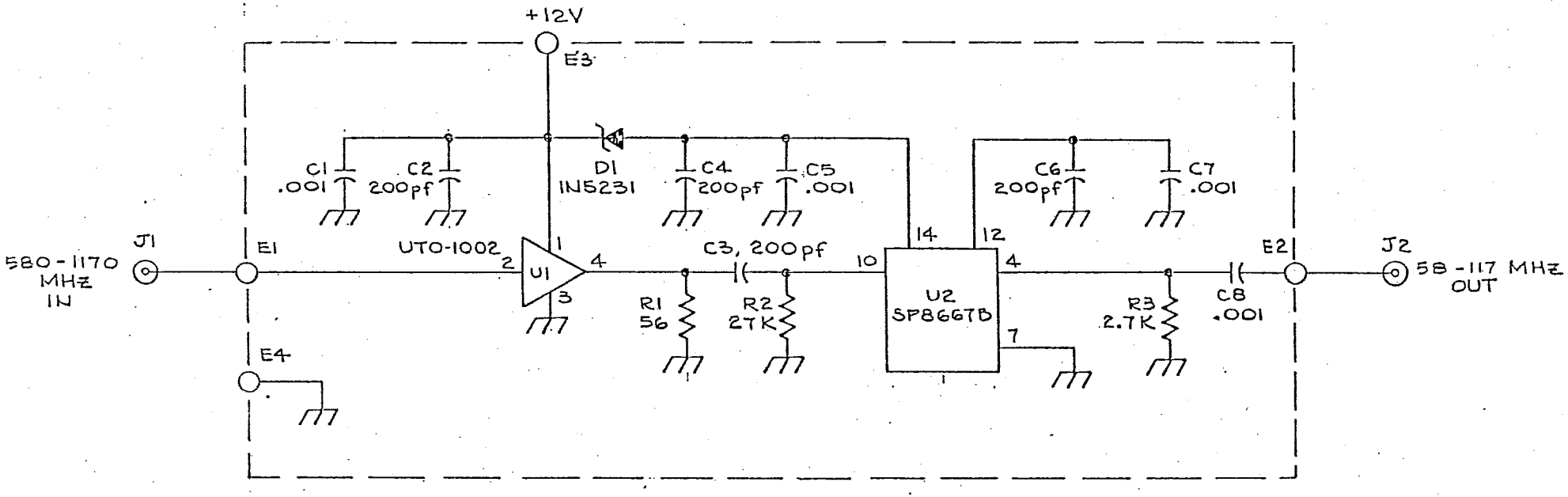

REF DESIGNATIONS	
LAST USED	NOT USED
C8 D1 E4 J2 R3 U2	

UNLESS OTHERWISE SPECIFIED:
ALL RESISTANCES ARE IN OHMS
ALL RESISTORS ARE 1/4 W
ALL CAPACITORS ARE IN MICROFARADS

PR-700A
A8810-SCHEMATIC,
580-1170 MHz DIVIDE BY 7
818810-033 10

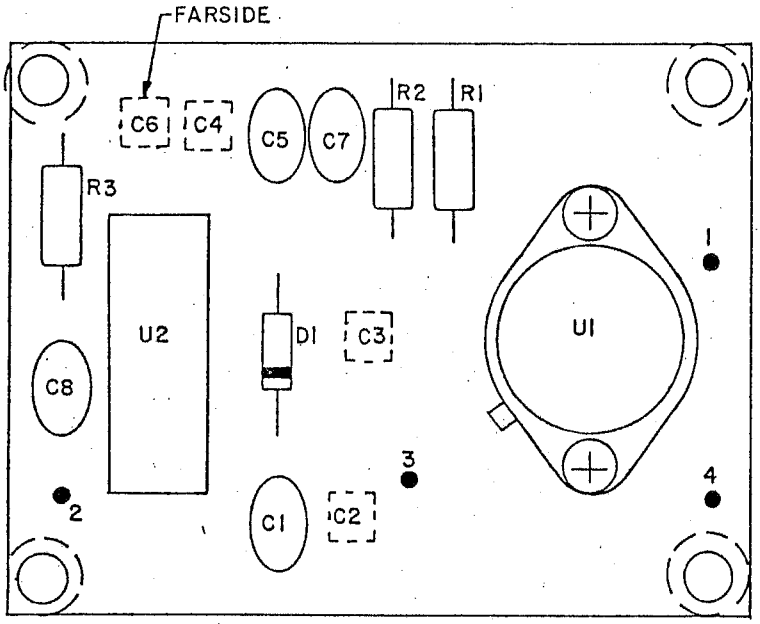

COMPONENT SIDE

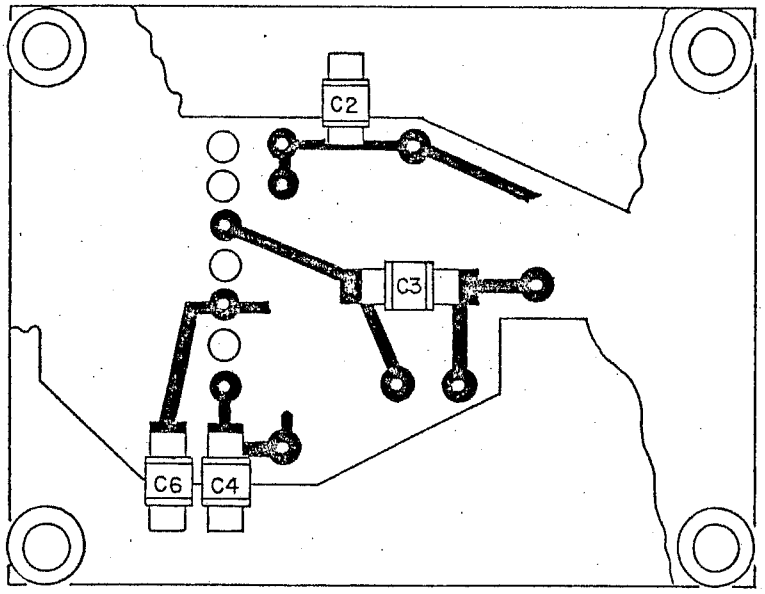

TRACK SIDE

PR-700A
A8B10-COMPONENT LOCATION
580-1170 MHz ÷ 10 ASS'Y
81B810-352

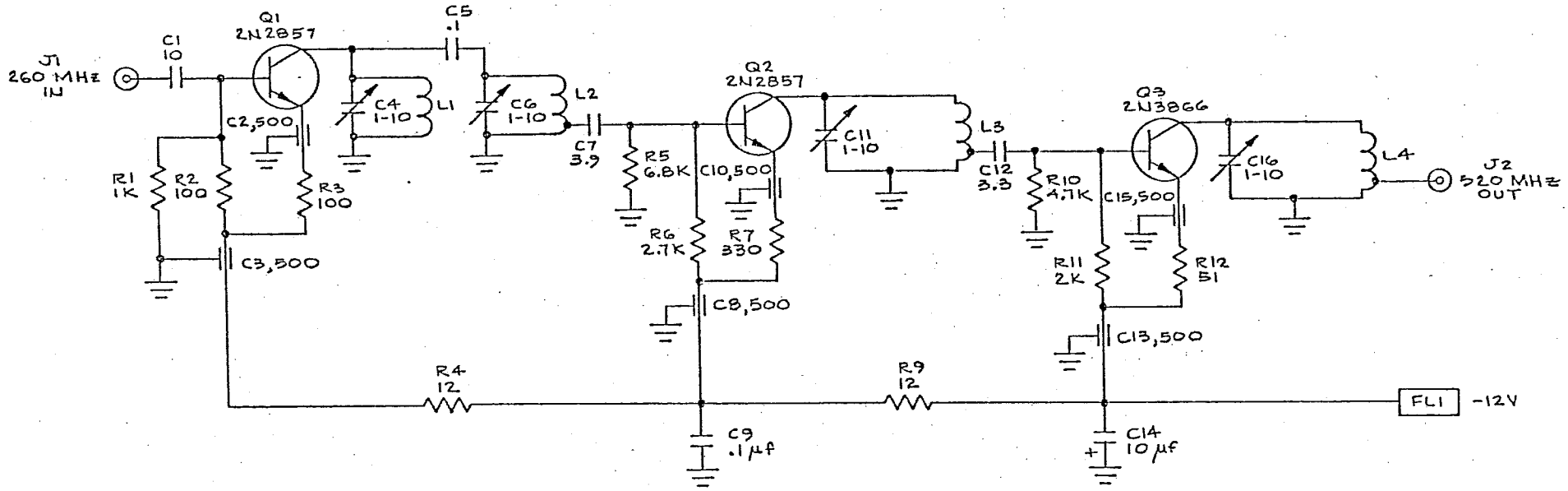

REF DESIGNATIONS	
LAST USED	NOT USED
C16 FL1 J2 L4 Q3 R12	R8

UNLESS OTHERWISE SPECIFIED:
ALL RESISTOR VALUES ARE IN OHMS
AND 1/4 W
ALL CAPACITOR VALUES ARE IN PICAFARADS

(USED ON S/N 126 & UP)

PR-700A
A8811-SCHEMATIC,
260-520 MHz FREQUENCY MULTIPLIE
81B811-034-1

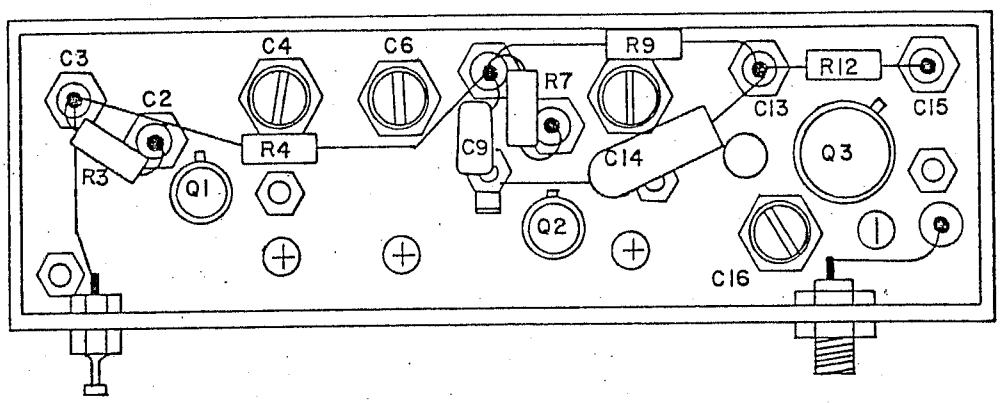

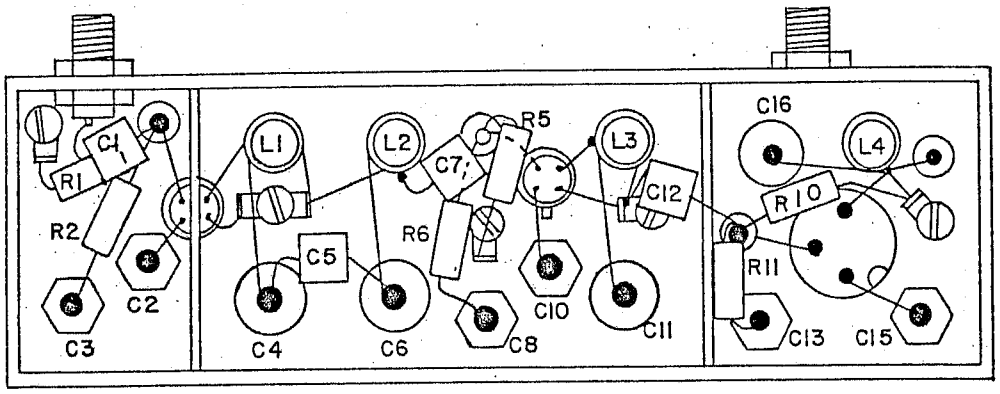

(USED ON UNITS S/N 126 & UP)

PR-700A
A8B11-COMPONENT LOCATION
260-520 MHz FREQUENCY MULTIPLIER

81A811-151

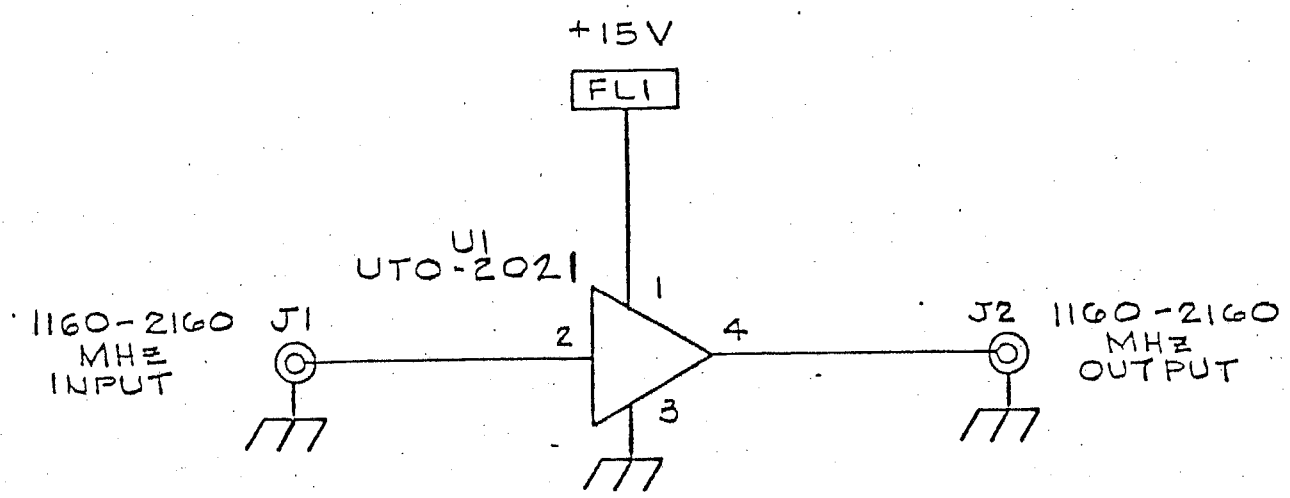

PR-700A
A8B12-SCHEMATIC,
.05-2 GHz AMPLIFIER

81A812-061

REV. PER CO. 229 11-/80

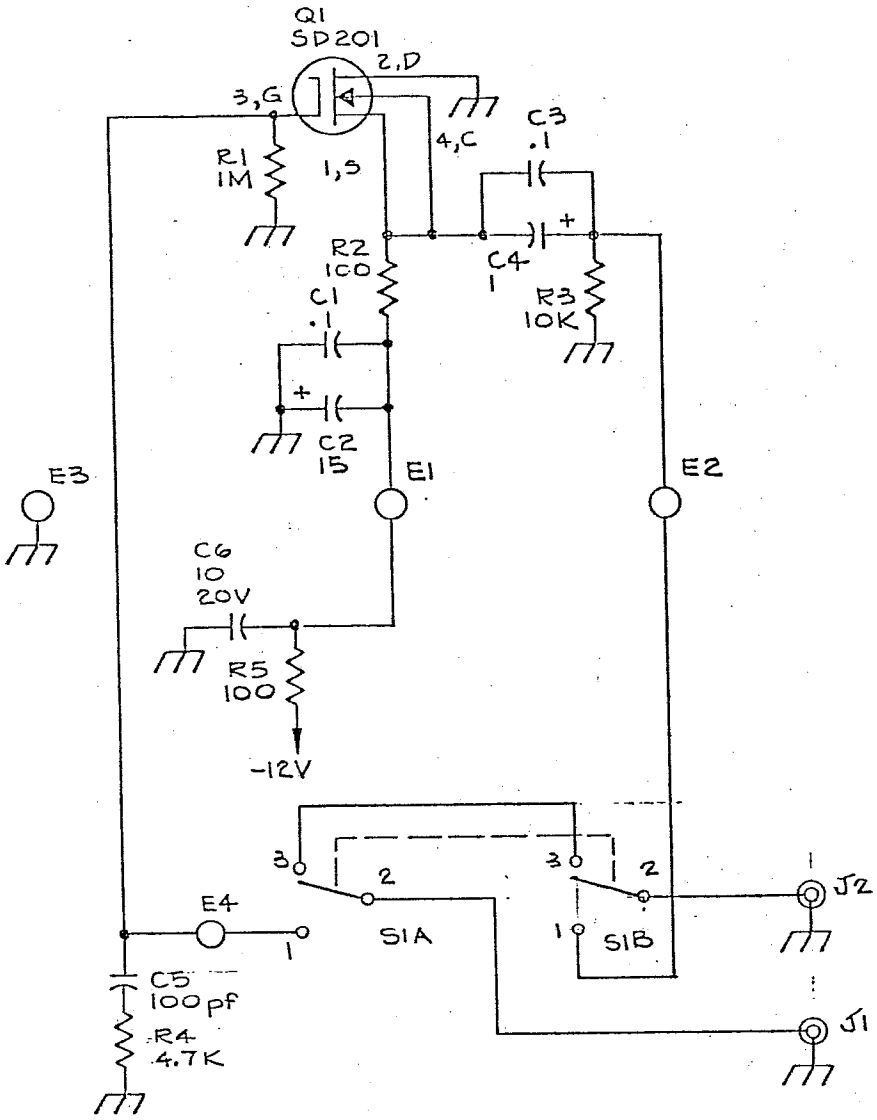

REF DESIGNATIONS	
LAST USED	NOT USED
C6 E4 J2 Q1 R5 S1	

UNLESS OTHERWISE SPECIFIED:
ALL RESISTANCES ARE IN OHMS
ALL RESISTORS ARE 1/4-W
ALL CAPACITORS ARE IN MICROFARADS

PR-700A
A8814-SCHEMATIC,
ANTENNA PREAMP

81B814-024

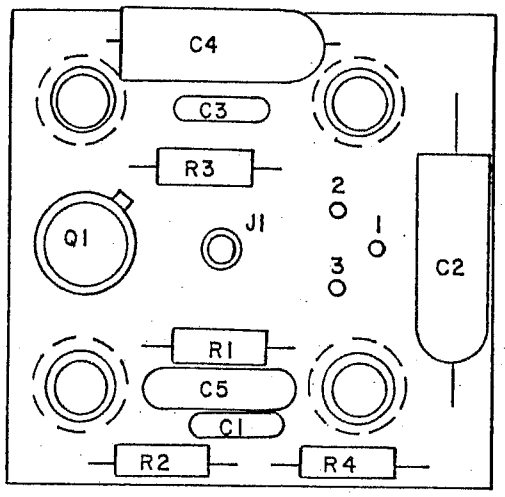

PR700A
A8B14-COMPONENT LOCATION
ANTENNA PREAMP P.C. ASS'Y
81A814-353

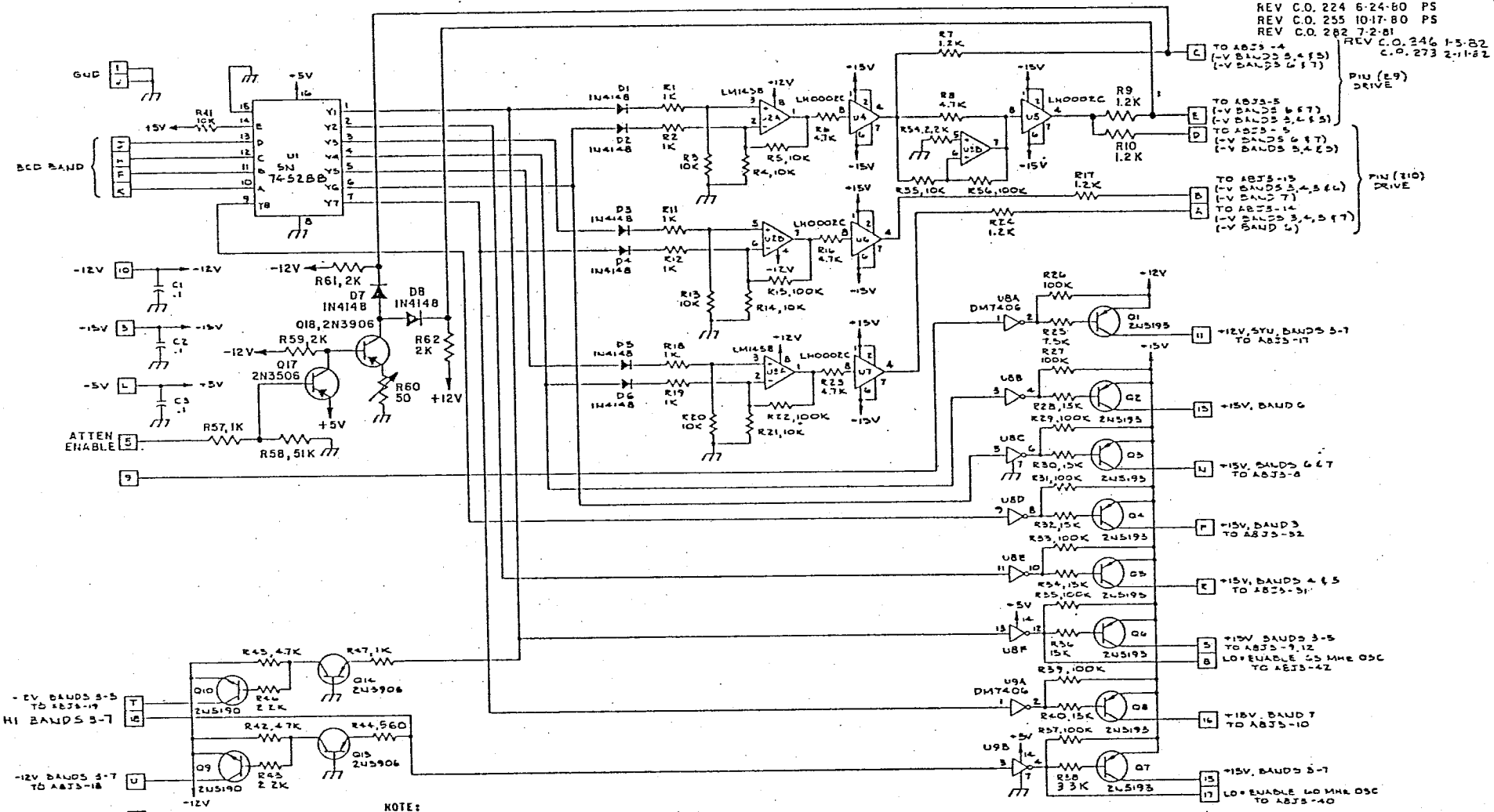

NOTE:
1. If American Microwave pin diode switch #2002-2 is used in place of Gen'l Microwave switch, reverse polarity of D7 & D8 and change to 1N270. R9 must also be changed from 1.2K to 510 ohm for this condition

REF DESIGNATIONS	
LAST USED	NOT USED
C5 D8 Q18 R62 U9	R41

UNLESS OTHERWISE SPECIFIED:
ALL RESISTANCES ARE IN OHMS
ALL RESISTORS ARE 1/4 W
ALL CAPACITORS ARE IN MICROFARADS.

U1 PROM PROGRAM

	ADDRESS						OUTPUT							
BAND	E	D	C	B	A		Y8	Y7	Y6	Y5	Y4	Y3	Y2	Y1
1	1	1	0	0	1		0	0	0	0	0	0	0	0
2	1	1	0	1	0		0	0	0	0	0	0	0	0
3	1	1	0	1	1		1	0	0	1	0	1	0	1
4	1	1	1	0	0		0	0	0	1	0	1	1	1
5	1	1	1	0	1		0	0	0	1	0	1	1	1
6	1	1	1	1	0		0	0	1	0	1	1	0	0
7	1	1	1	1	1		0	1	1	1	0	0	0	0

PR-707C
PR-700B
A8B15-SCHEMATIC,
RF SWITCHING
81B815-1010

REV PER CO NO 490 6/19/84 WMW

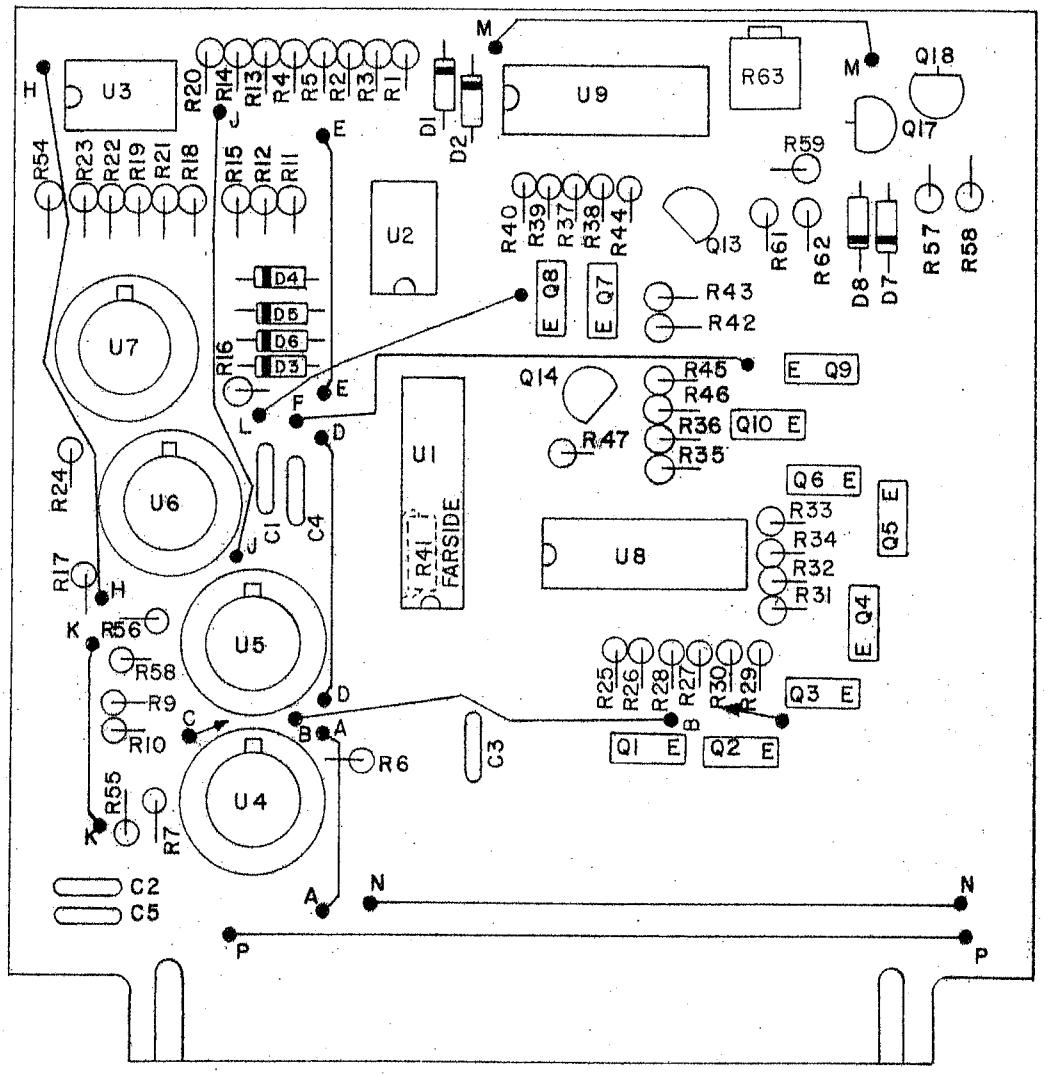

PR-700B, PR-707C
COMPONENT LAYOUT, A8B15
RF SWITCHING LOGIC

81A815-1362

A- EFF. C.O. 175 10/16/79 FS
B- EFF. CO. 494 6/19/84 WMW
C- EFF CO NO 553 & 554 7/23/85 WMW

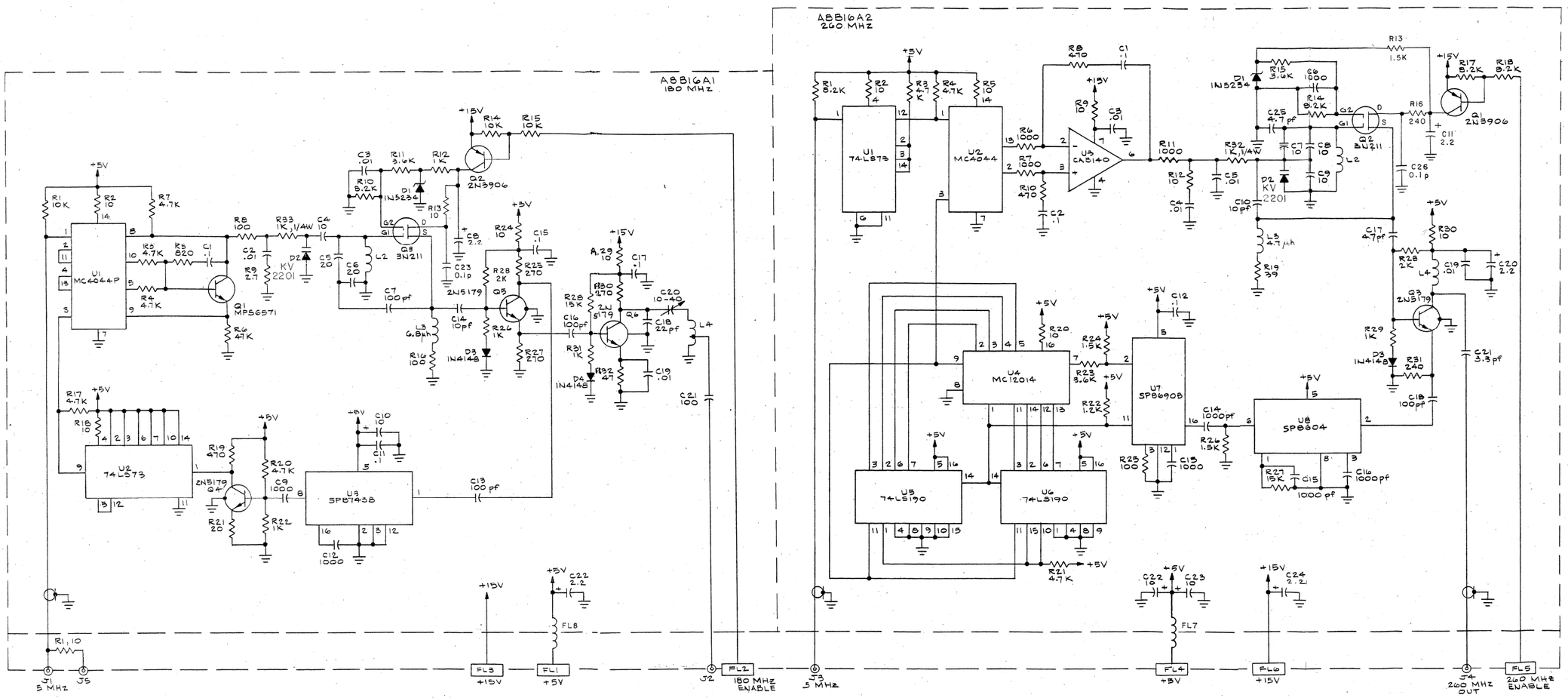

	REF DESIGNATIONS	
	LAST USED	NOT USED
A8B16A1	C23 D4 L4 Q5 R33 U8	L1
A8B16A2	C26 D2 L2 Q3 R32 U8	L1

UNLESS OTHERWISE SPECIFIED:
ALL RESISTOR VALUES ARE IN OHMS AND 1/8W
ALL CAPACITOR VALUES ARE IN MICROFARADS

(USED ON S/N 126 & UP)

PR-700A
A8B16-SCHEMATIC,
180/260 MHz Ø LOCK LOOP
81R816-059C

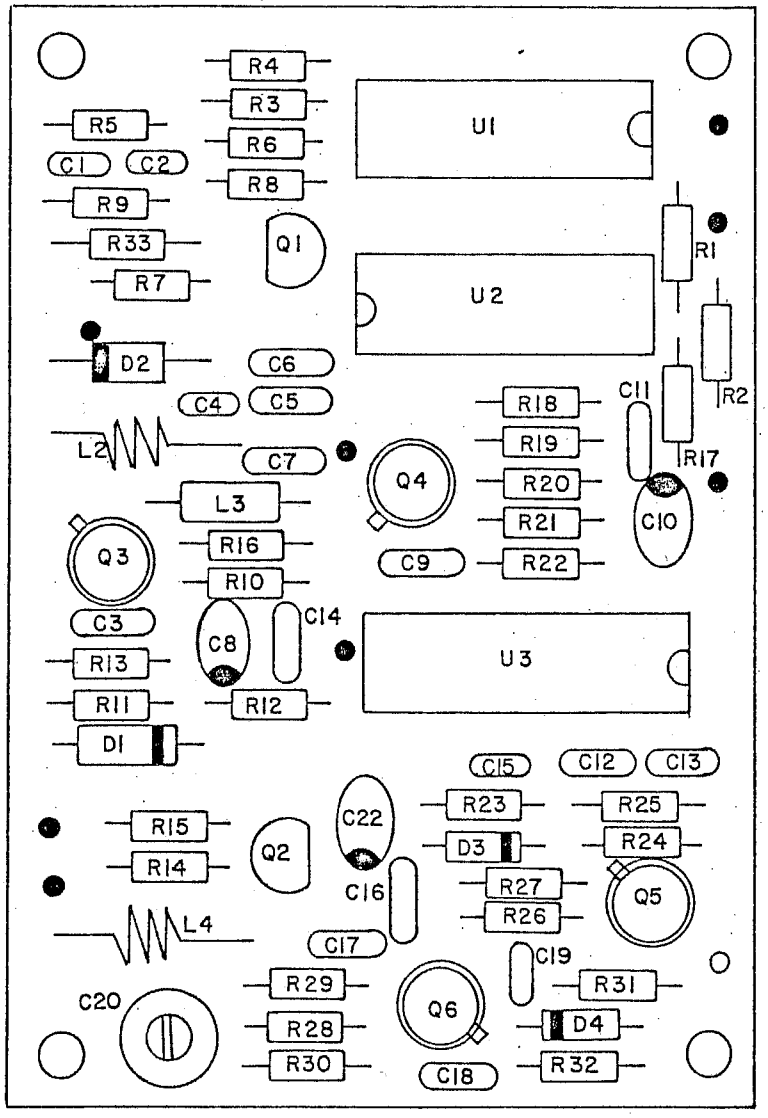

USED ON UNITS S/N 126 & UP

PR-700A
COMPONENT LAYOUT, A8B16A1
180 MHz

81A816-164

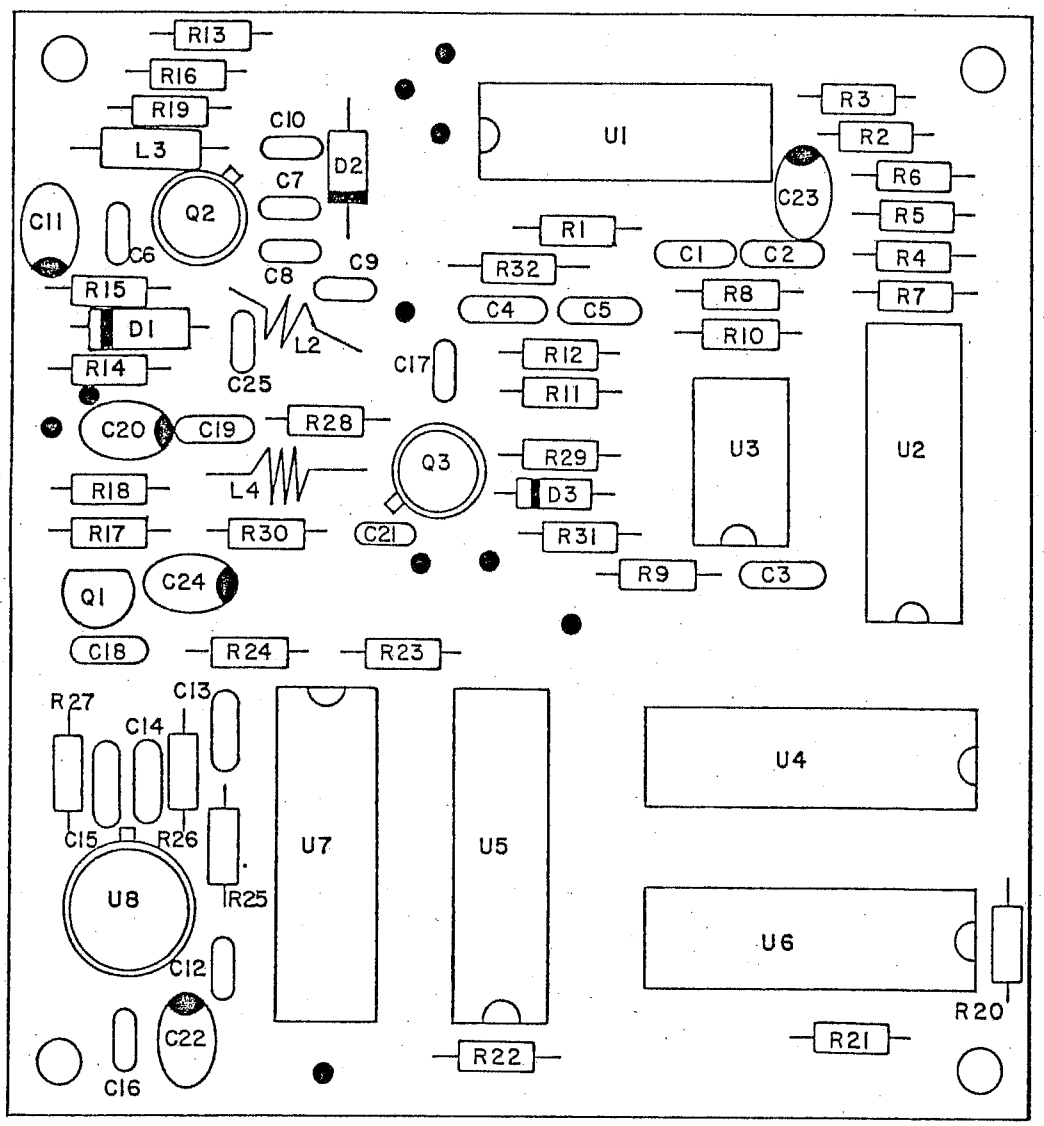

USED ON UNITS S/N 126 & UP

PR-700A
COMPONENT LAYOUT, A8B16A2
260 MHz

81A816-165

REV. A PER CO. NO. 446 10/20/83 WMW
REV. B PER CO NO 509 9/17/84 WMW

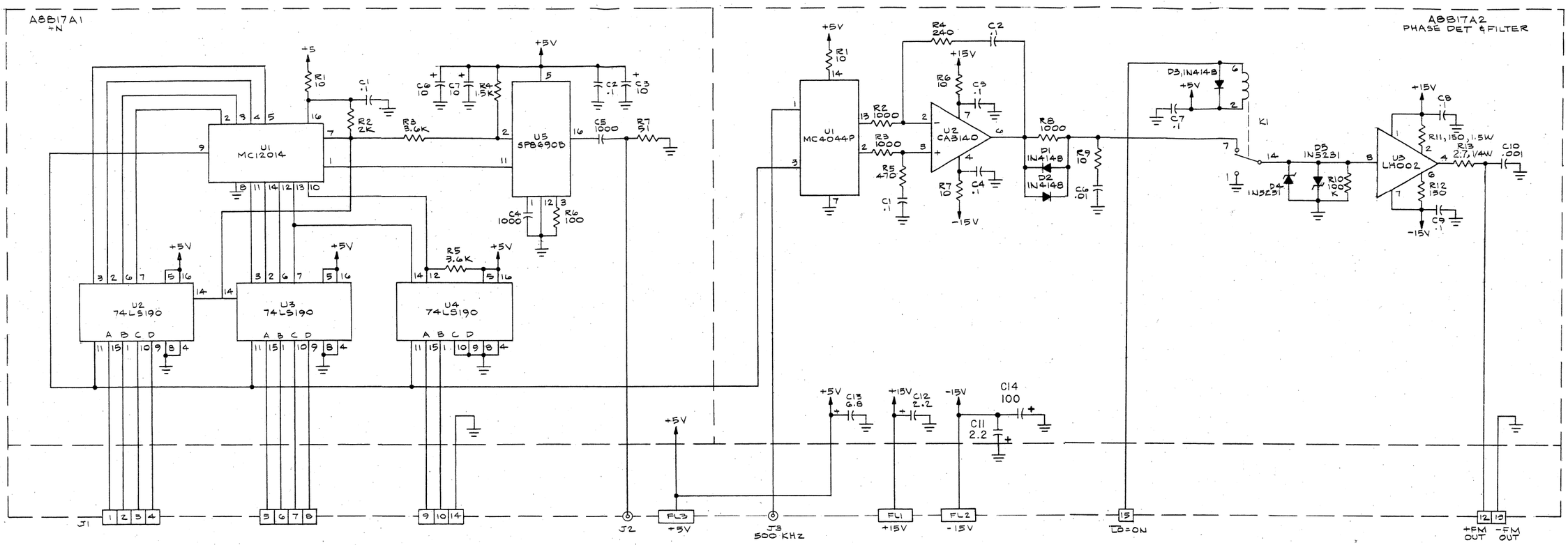

	REF DESIGNATIONS	
	LAST USED	NOT USED
A8B17A1	C7 R7 U5	
A8B17A2	C14 D5 K1 R13 U3	C5

UNLESS OTHERWISE SPECIFIED:
ALL RESISTOR VALUES ARE IN OHMS AND 1/8W
ALL CAPACITOR VALUES ARE IN MICROFARADS

(USED ON UNITS S/N 126 & UP)

PR-700A
A8B17-SCHEMATIC,
YIG Ø LOCK LOOP FILTER

8IR817-060

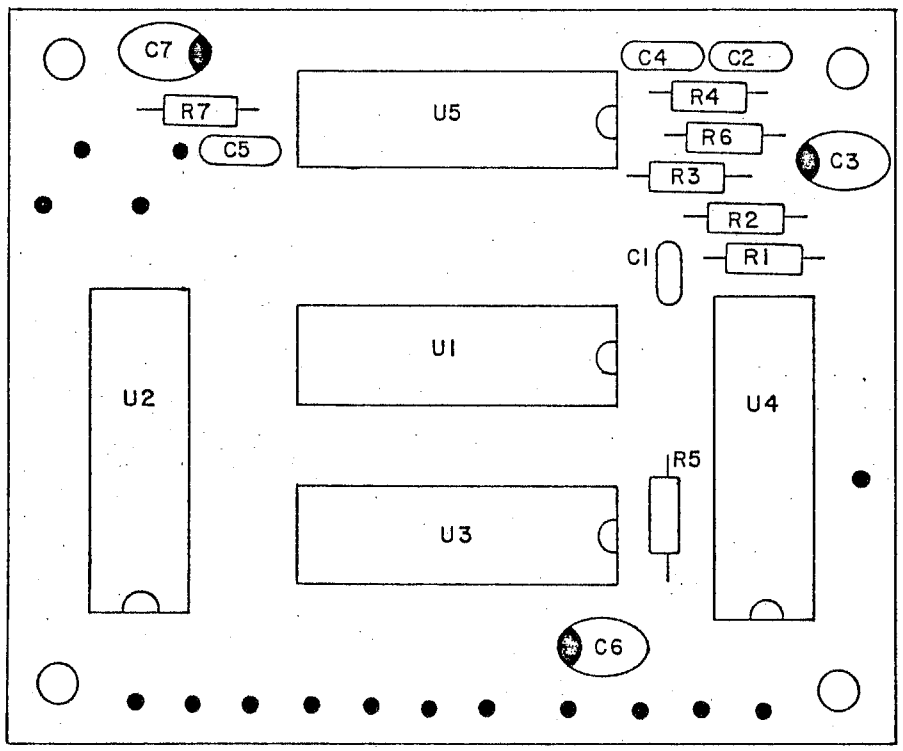

USED ON UNITS S/N 126 & UP

PR-700A
COMPONENT LAYOUT, A8B17A1
÷ N
81A817-167

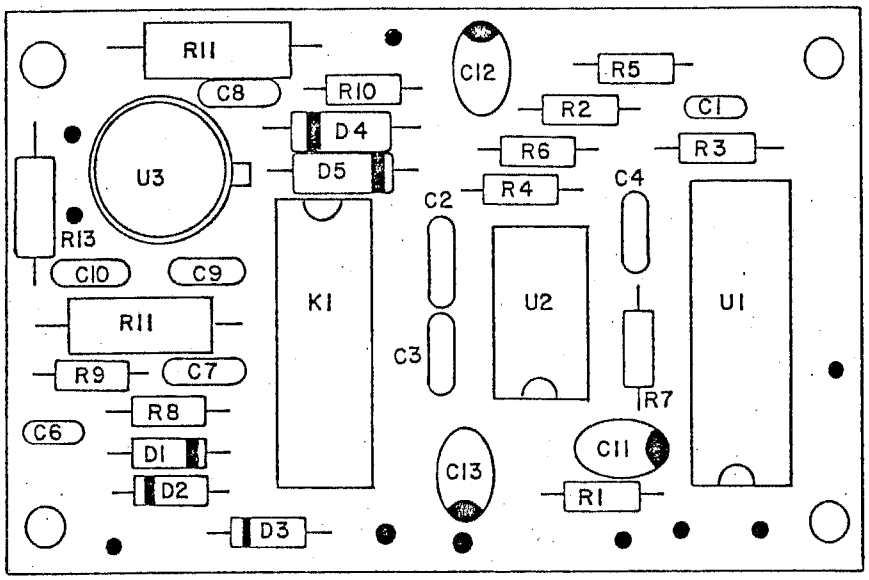

USED ON UNITS S/N 126 & UP

PR-700A
A8B17A2 COMPONENT LOCATION
Ø DET & FILTER
81A817-168

REV. PER C.O. 208 6-2-80 FS
REV PER CO 493 6/19/84 WMW

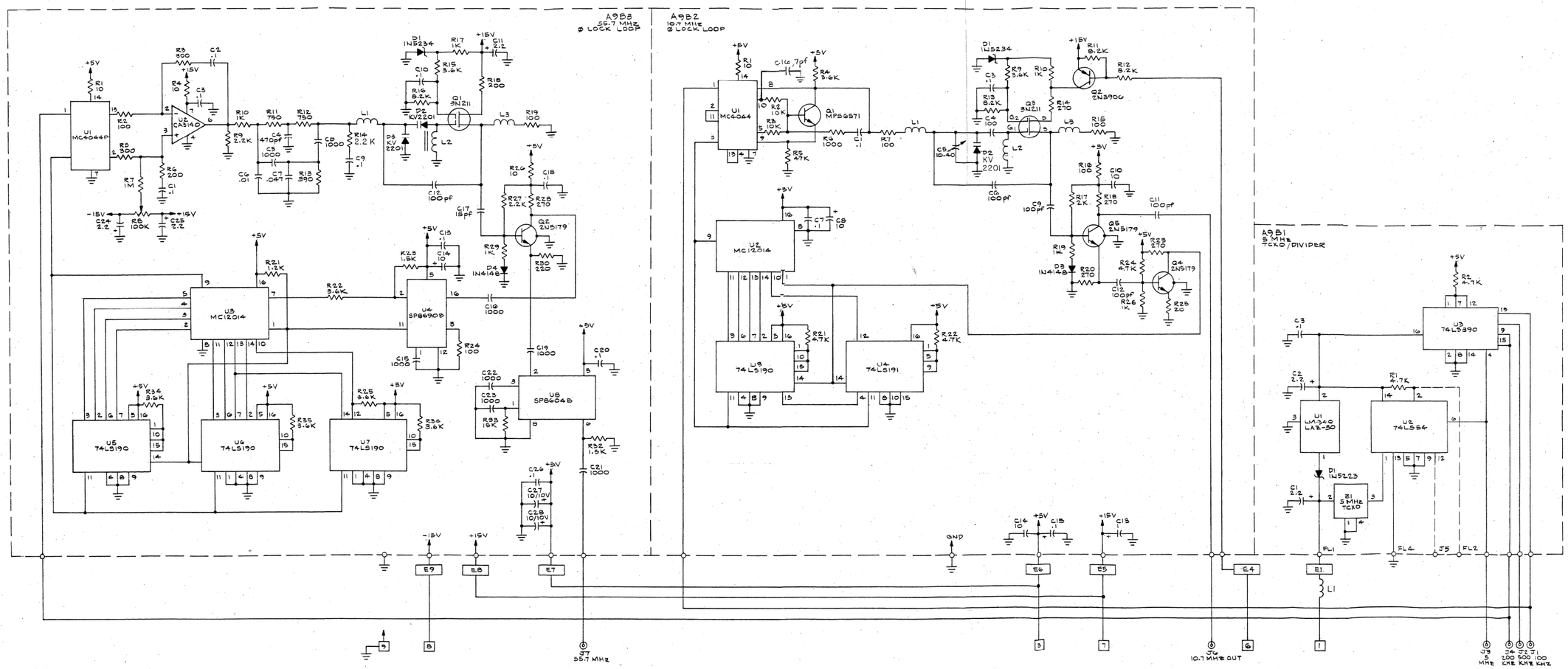

REF DESIGNATIONS		
	LAST USED	NOT USED
A9B1	C3 D1 R2 U3 Z1	
A9B2	C16 D3 Q3 U3 R26 U4	C2 R8
A9B3	C28 D4 Q5 U8 R34 C28	R20, 31

UNLESS OTHERWISE SPECIFIED:
ALL RESISTOR VALUES ARE IN OHMS 1/8W
ALL CAPACITOR VALUES ARE IN MICROFARADS

(USED ON S/N 126 & UP)

PR-700A
A9 - SCHEMATIC,
REFERENCE OSCILLATOR
81R90-013-1

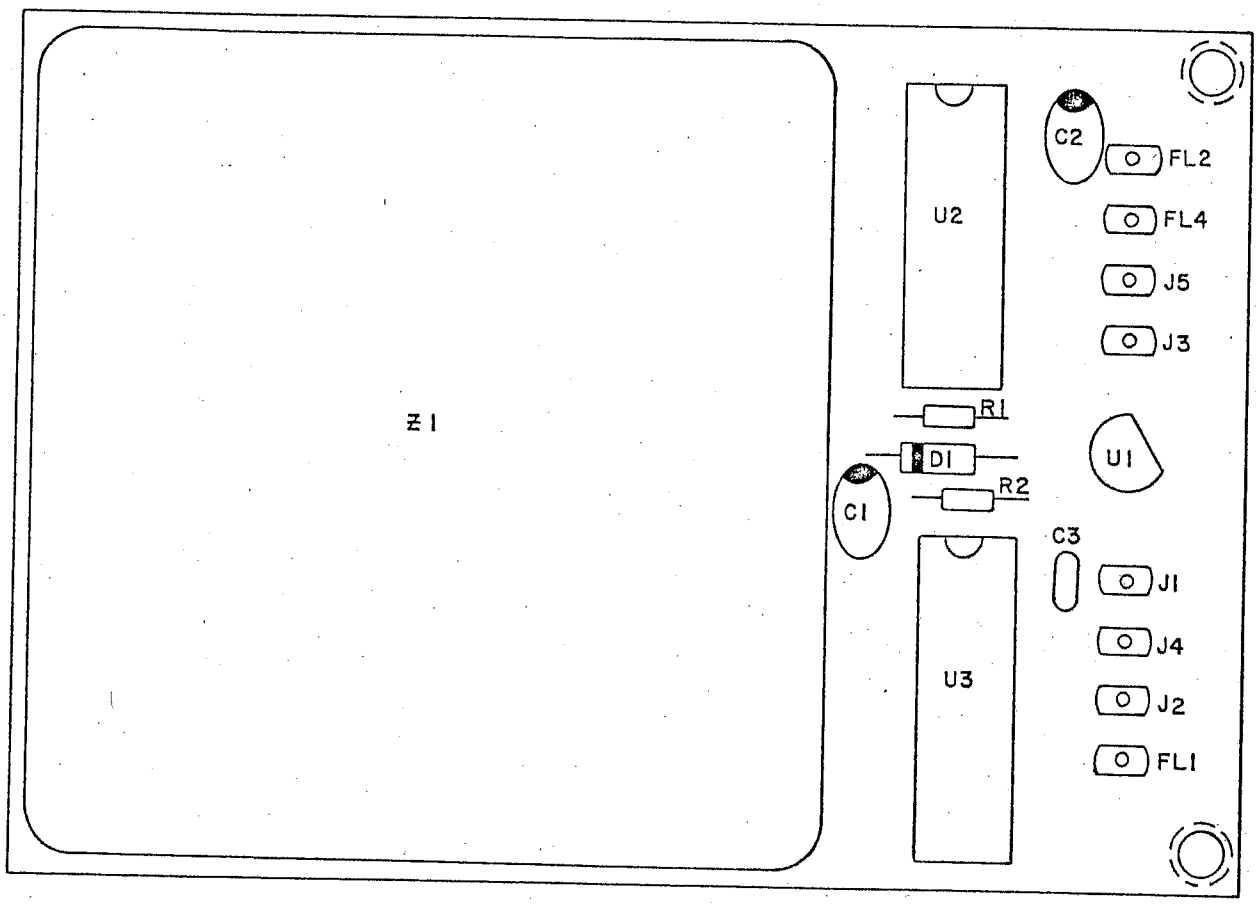

USED ON UNITS S/N 126 & UP

PR-700A
A9B1-COMPONENT LOCATION
TCXO/DIVIDERS
81A91-158

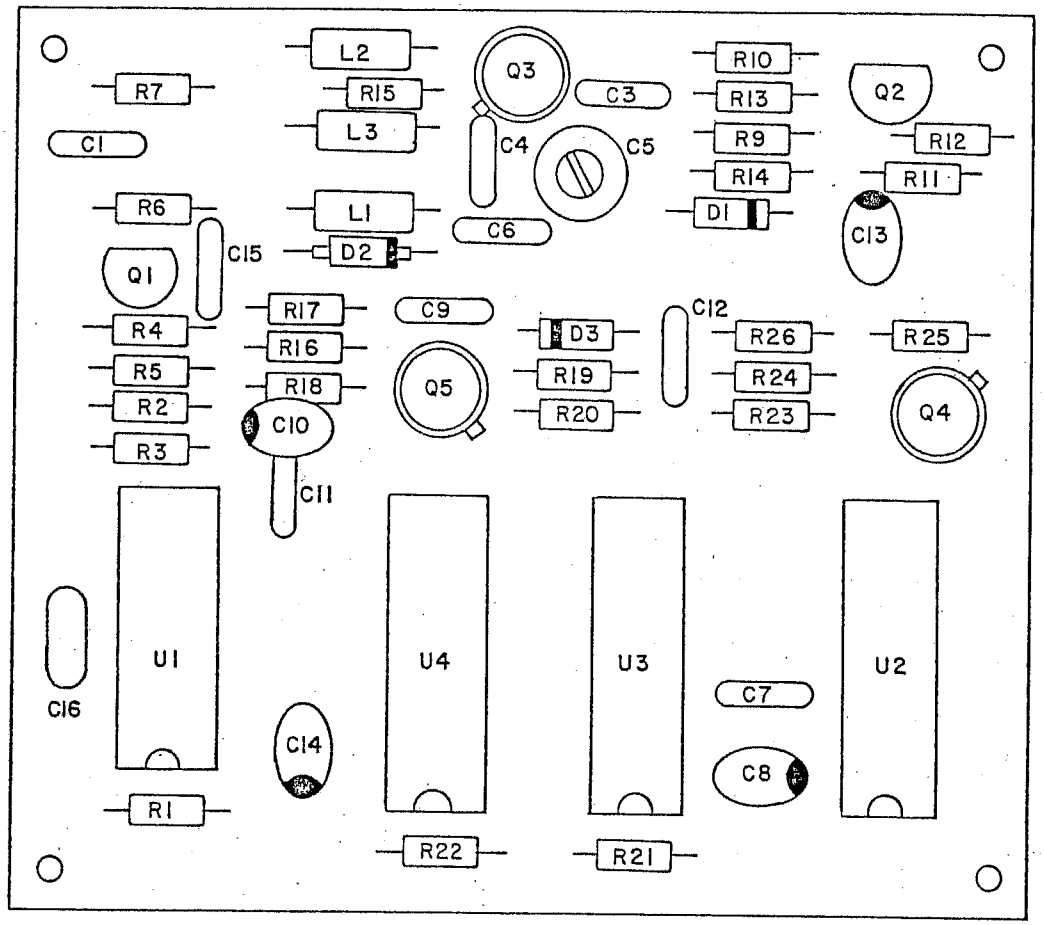

USED ON UNITS S/N 126 & UP

PR700A
COMPONENT LAYOUT, A9B2
10.7 MHz

81A92-159

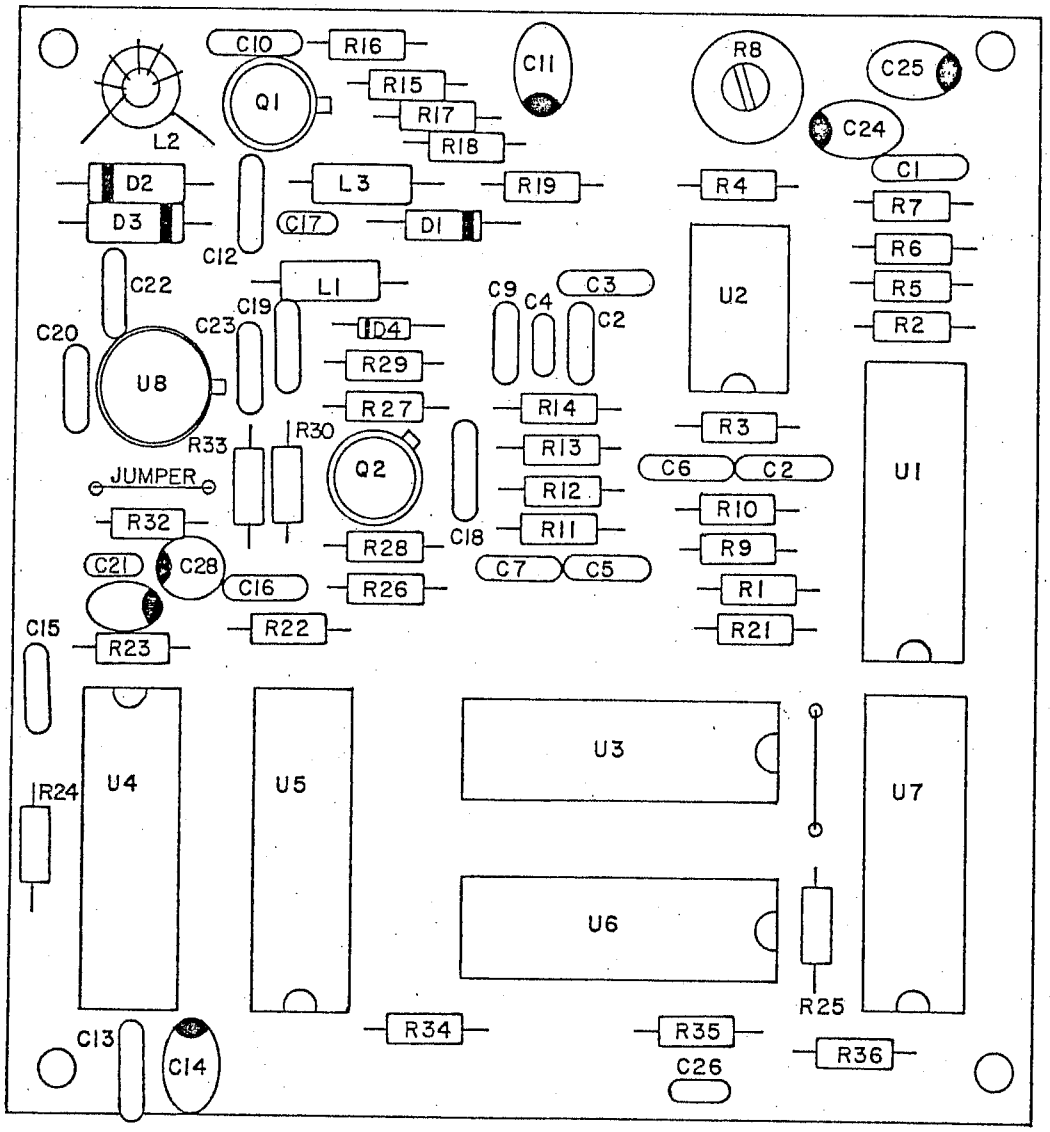

USED ON UNITS S/N 126 & UP

PR700A
COMPONENT LAYOUT, A9B3
55.7 MHz Ø LOCK LOOP

81A93-160

C.O. 427	3/24/81	LWK
C.O. 264	3/17/81	LWK
C.O. 258	2/13/82	PS
C.O. 311	2/11/82	JFF
C.O. 366	3/8/82	JFF
C.O. 551	6/20/85	LWB
C.O. 600	6/10/86	LWB

Corrections shown below

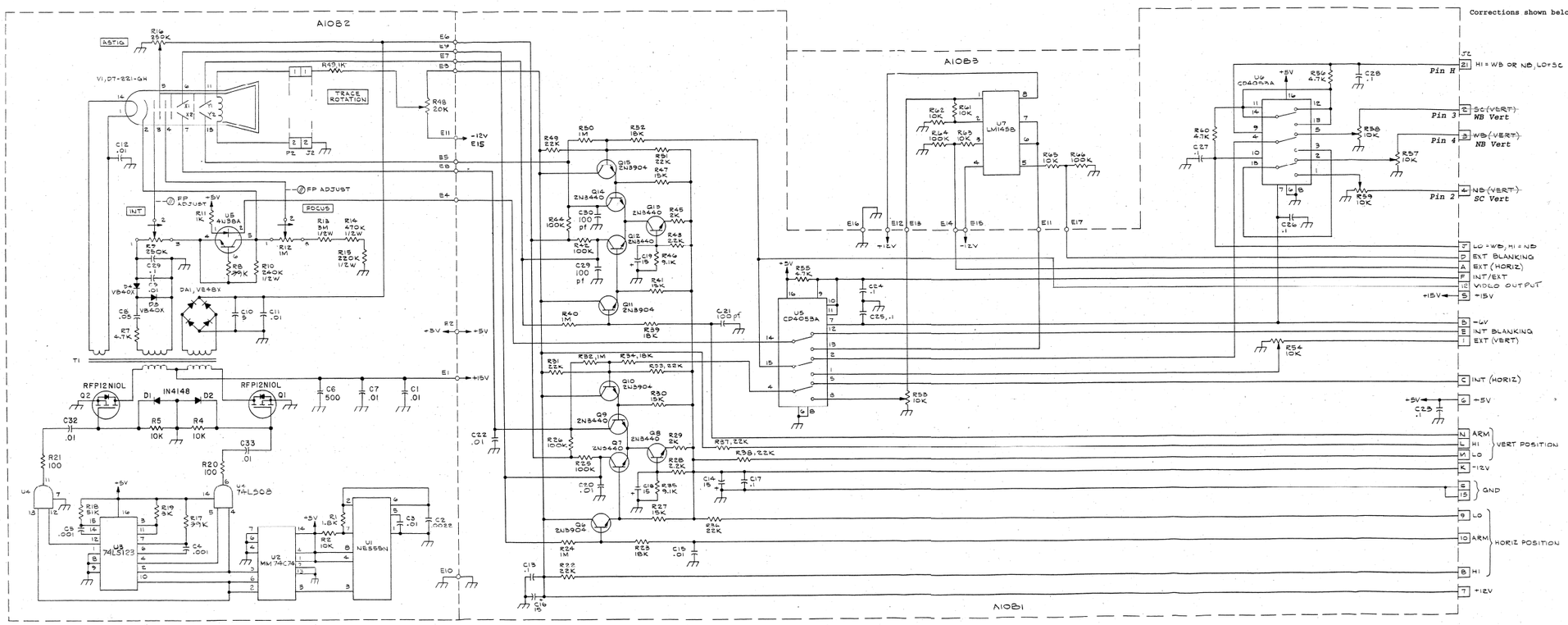

REFERENCE DESIGNATION					
A10B1		A10B2		A10B3	
LAST USED	NOT USED	LAST USED	NOT USED	LAST USED	NOT USED
C60 D15 E40 U4 E17	C1-14 Q1-5 R1-21, R48 U1-4	C33 D4 D4 Q2 R49 T1 U5 V1 E10	C13-28 R22-47,4,5	R66 U7 E17	R1-60 Q1-6 E1-10

UNLESS OTHERWISE SPECIFIED:
ALL RESISTANCES ARE IN OHMS
ALL RESISTORS ARE 1/4 W
ALL CAPACITORS ARE IN MICROFARADS

PR-700A
A10 - SCHEMATIC,
OSCILLOSCOPE

81R100-015G

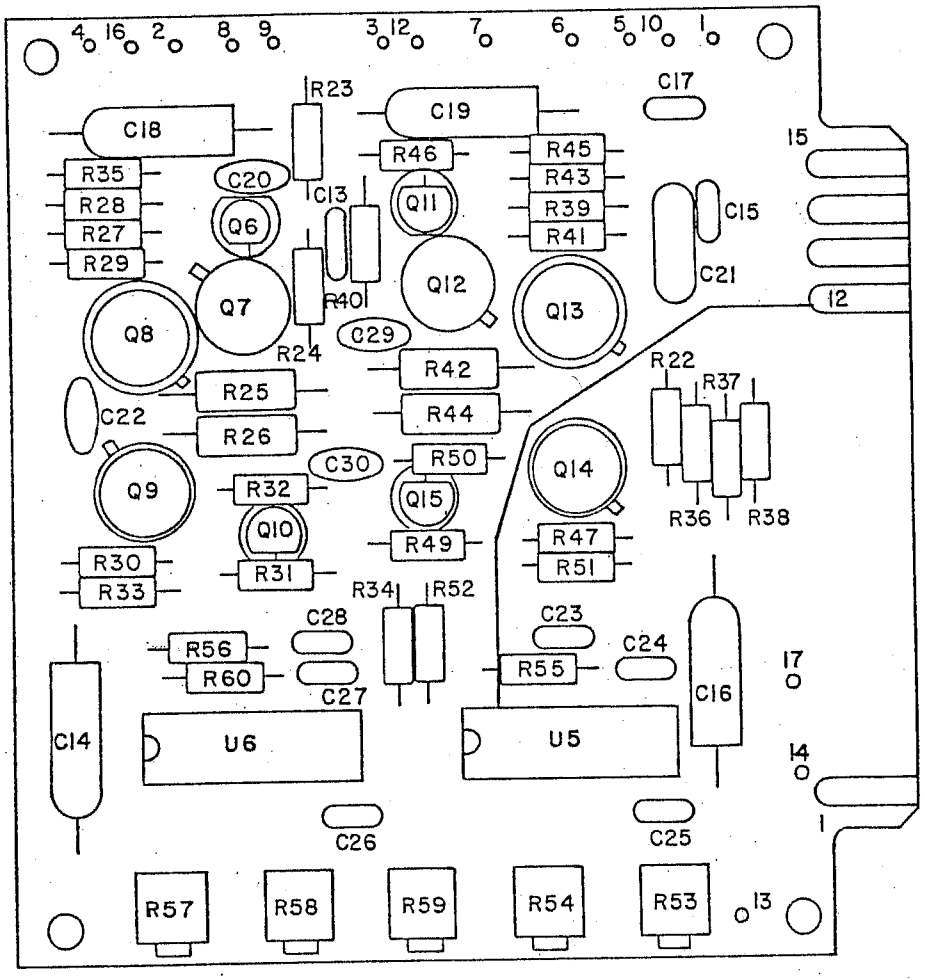

PR-700A
A10B1-COMPONENT LOCATION
SCOPE BD. ASS'Y

81B101-354

REV PER C.O. NO. 566
3/8/82 JFF

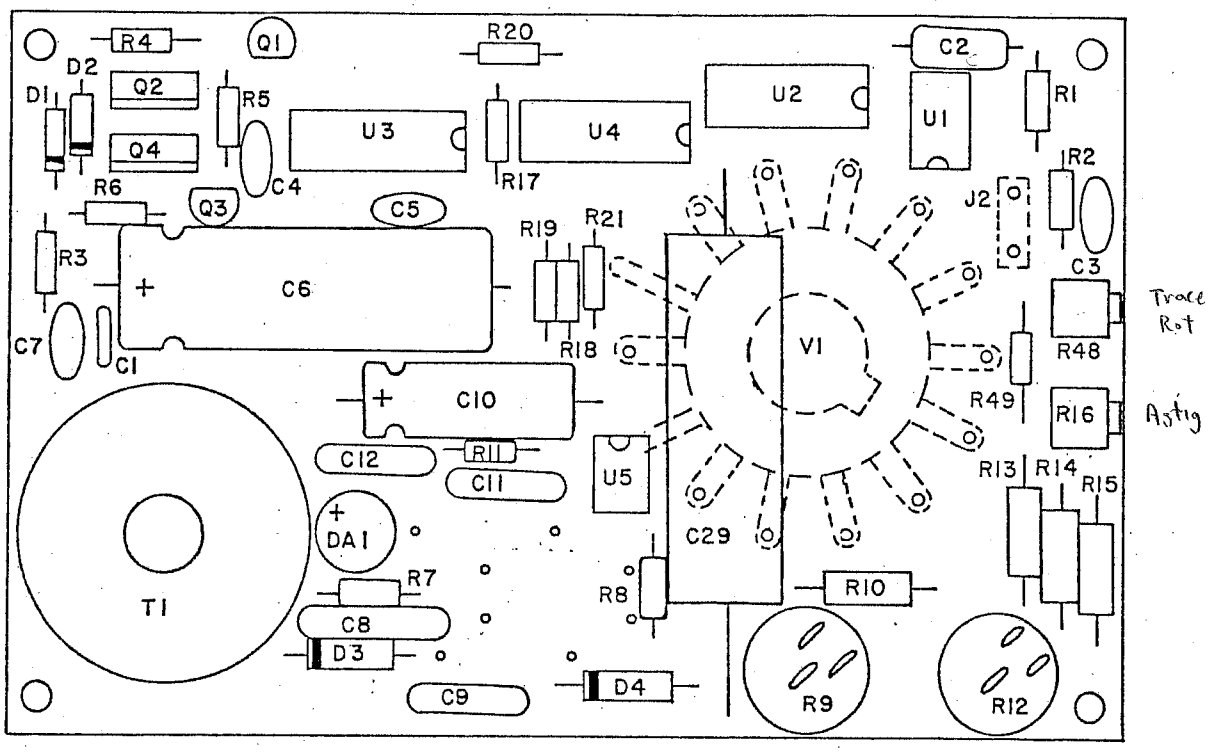

PR-700A
A10B2-COMPONENT LOCATION
SCOPE ASS'Y BOARD # 2

81B102-355

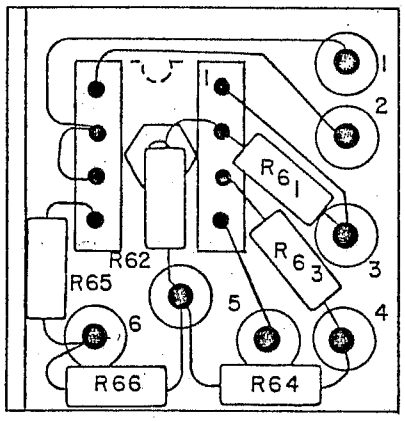

USED ON UNITS S/N 103 & UP

PR-700A
A10B3-COMPONENT LOCATION
BUFFER/AMPL
81A103-398

REV. A PER. CO. NO. 428 4/14/83 WMW

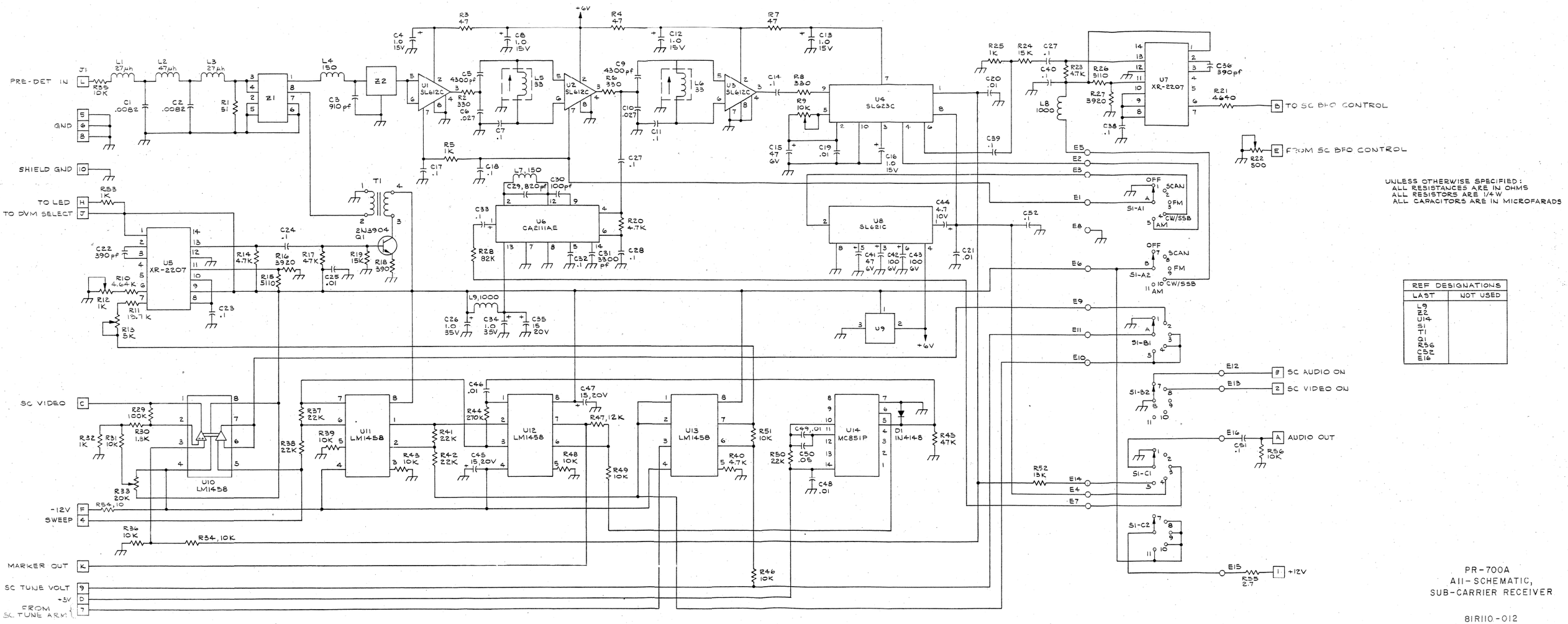

UNLESS OTHERWISE SPECIFIED:
ALL RESISTANCES ARE IN OHMS
ALL RESISTORS ARE 1/4 W
ALL CAPACITORS ARE IN MICROFARADS

REF DESIGNATIONS	
LAST	NOT USED
L9	
Z2	
U14	
S1	
T1	
Q1	
R56	
C52	
E16	

PR-700A
A11-SCHEMATIC,
SUB-CARRIER RECEIVER

81R110-012

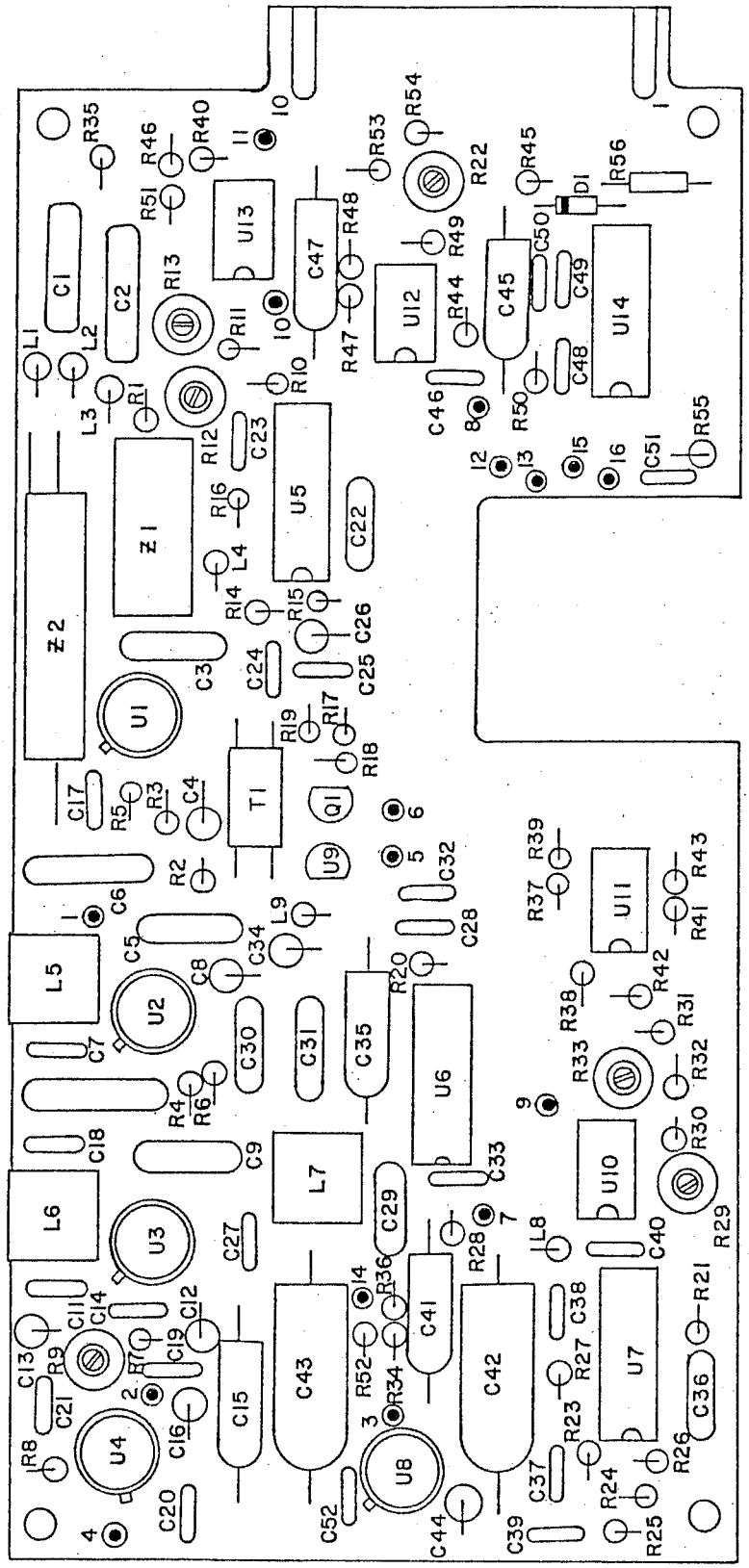

PR-700
All-COMPONENT LOCATION
SUB-CARRIER RCV'R ASS'Y

81B11-345

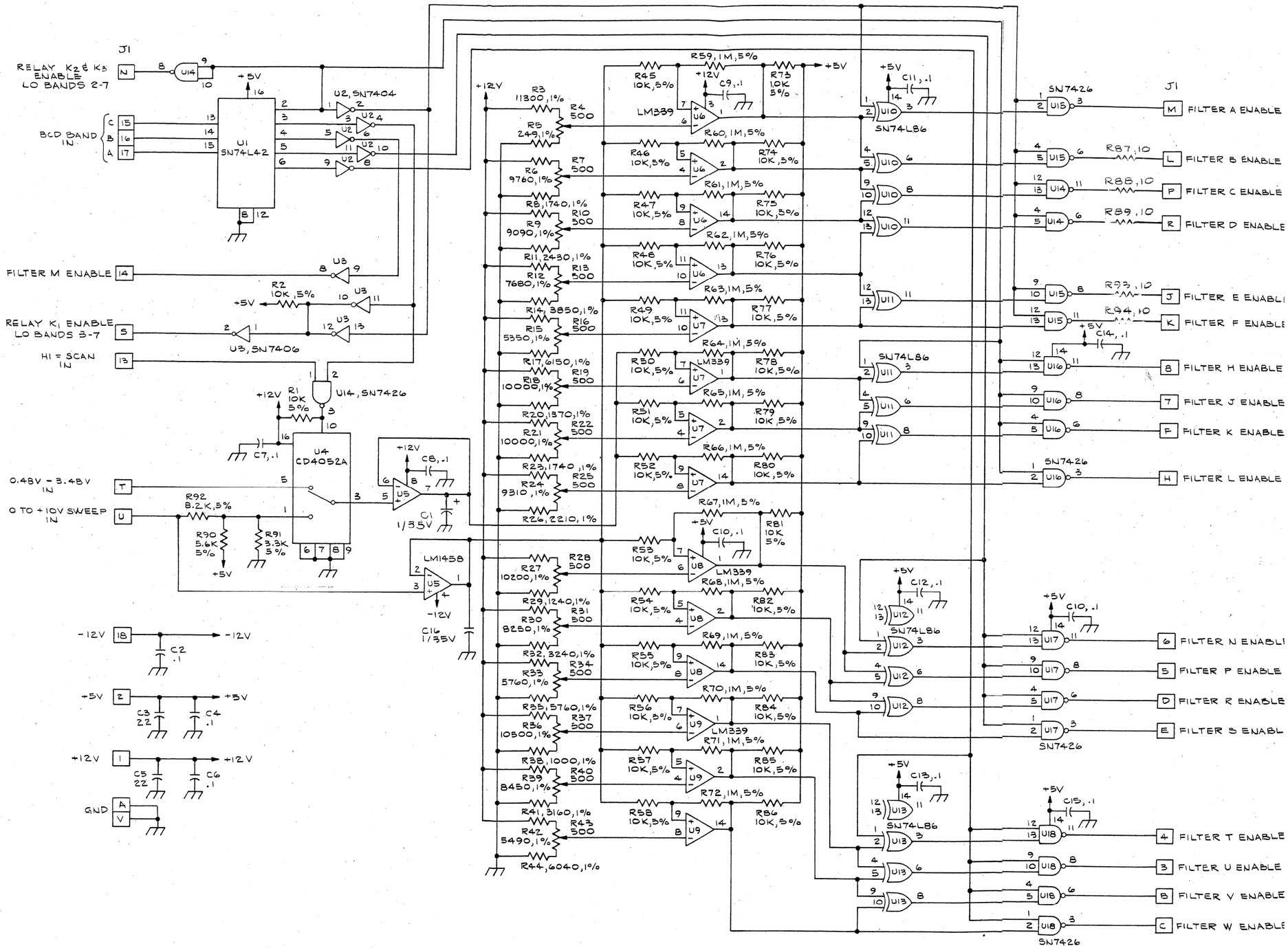

	+5V PIN No.	+12V PIN No.	-12V PIN No.	GND PIN No.	No. of PINS
U1	16	—	—	8	16
U2	14	—	—	7	14
U3	14	—	—	7	14
U4	—	16	—	6,7,8,9	16
U5	—	8	4	—	8
U6	—	3	—	12	14
U7	—	3	—	12	14
U8	—	3	—	12	14
U9	—	3	—	12	14
U10	14	—	—	7	14
U11	14	—	—	7	14
U12	14	—	—	7	14
U13	14	—	—	7	14
U14	14	—	—	7	14
U15	14	—	—	7	14
U16	14	—	—	7	14
U17	14	—	—	7	14
U18	14	—	—	7	14

REF DESIGNATIONS	
LAST USED	NOT USED
C16 J1 R94 U18	

UNLESS OTHERWISE SPECIFIED:
ALL RESISTANCES ARE IN OHMS
ALL 1% RESISTORS ARE 1/8 W
ALL 5% RESISTORS ARE 1/4 W
ALL CAPACITORS ARE IN MICROFARADS

PR-700A
A12B1 - SCHEMATIC,
PRESELECTOR FILTER SWITCH

81R121-039

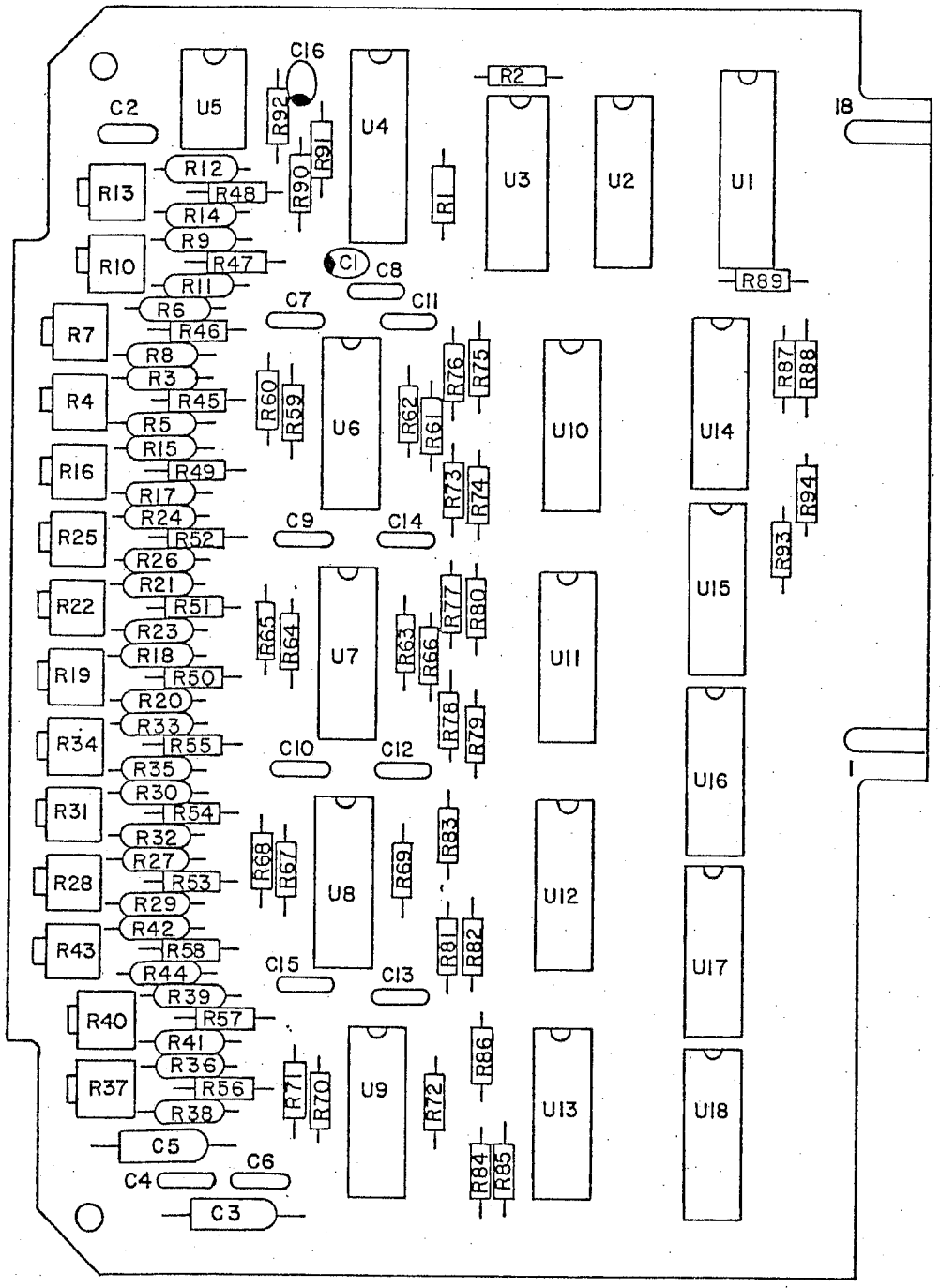

PR-700A
A12B1-COMPONENT LOCATION
PRE SELECTOR/FILTER SW.

81B121-375

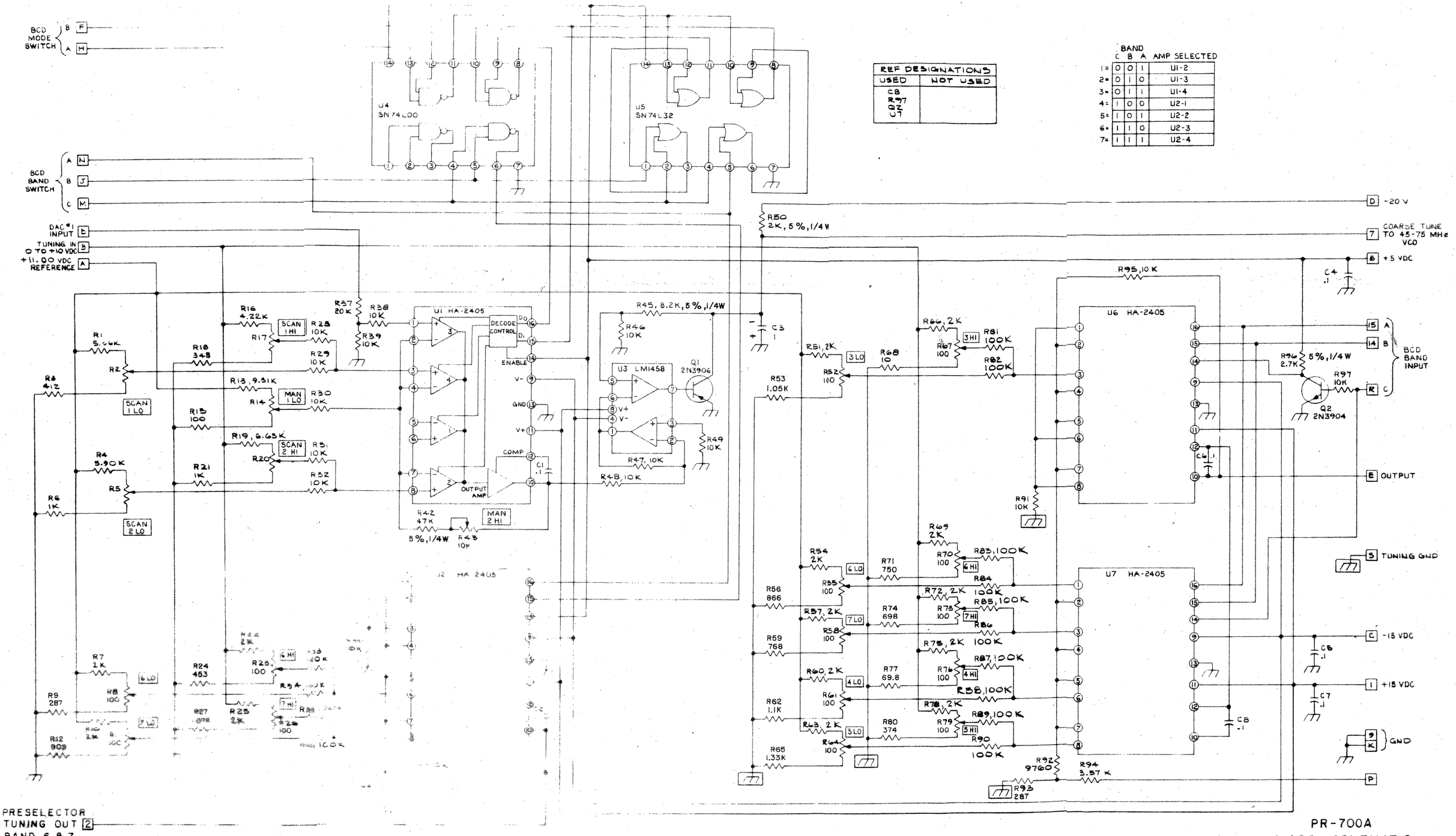

REF DESIGNATIONS	
USED	NOT USED
C8 R97 Q2 U7	

	BAND C	B	A	AMP SELECTED
1=	0	0	1	U1-2
2=	0	1	0	U1-3
3=	0	1	1	U1-4
4=	1	0	0	U2-1
5=	1	0	1	U2-2
6=	1	1	0	U2-3
7=	1	1	1	U2-4

UNLESS OTHERWISE SPECIFIED:
ALL RESISTANCES ARE IN OHMS
ALL RESISTORS ARE 1/8W, 1%
ALL CAPACITORS ARE IN MICROFARADS

PR-700A
A12B2 — SCHEMATIC, YIG TRACKING

81R122-022

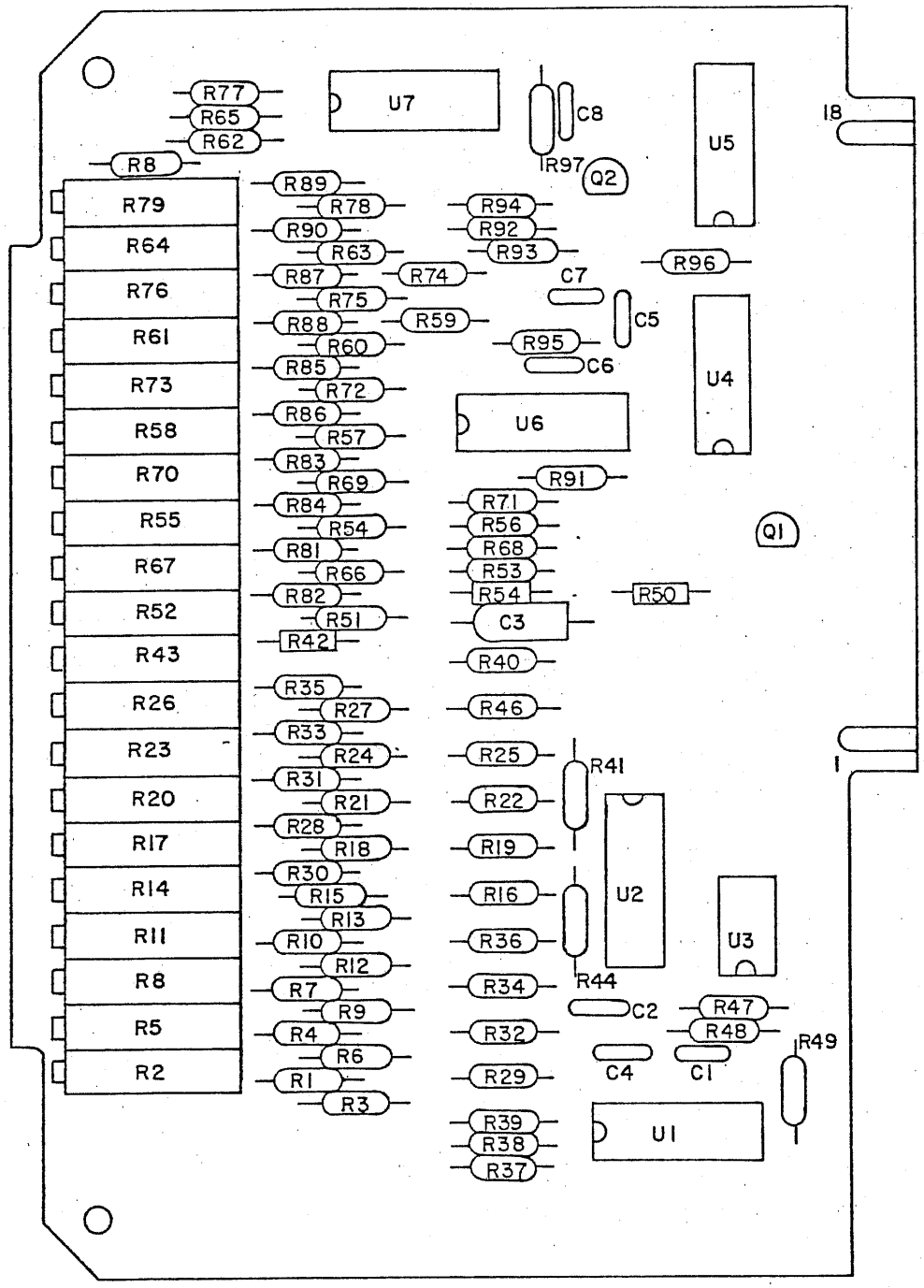

PR-700A
A12B2-COMPONENT LOCATION
YIG TRACKING BOARD
81B122-360

EFF. C.O 194 1/8/80 PS
C.O. 337A 2/12/82 JFF
C.O. 362 2/24/82 JFF

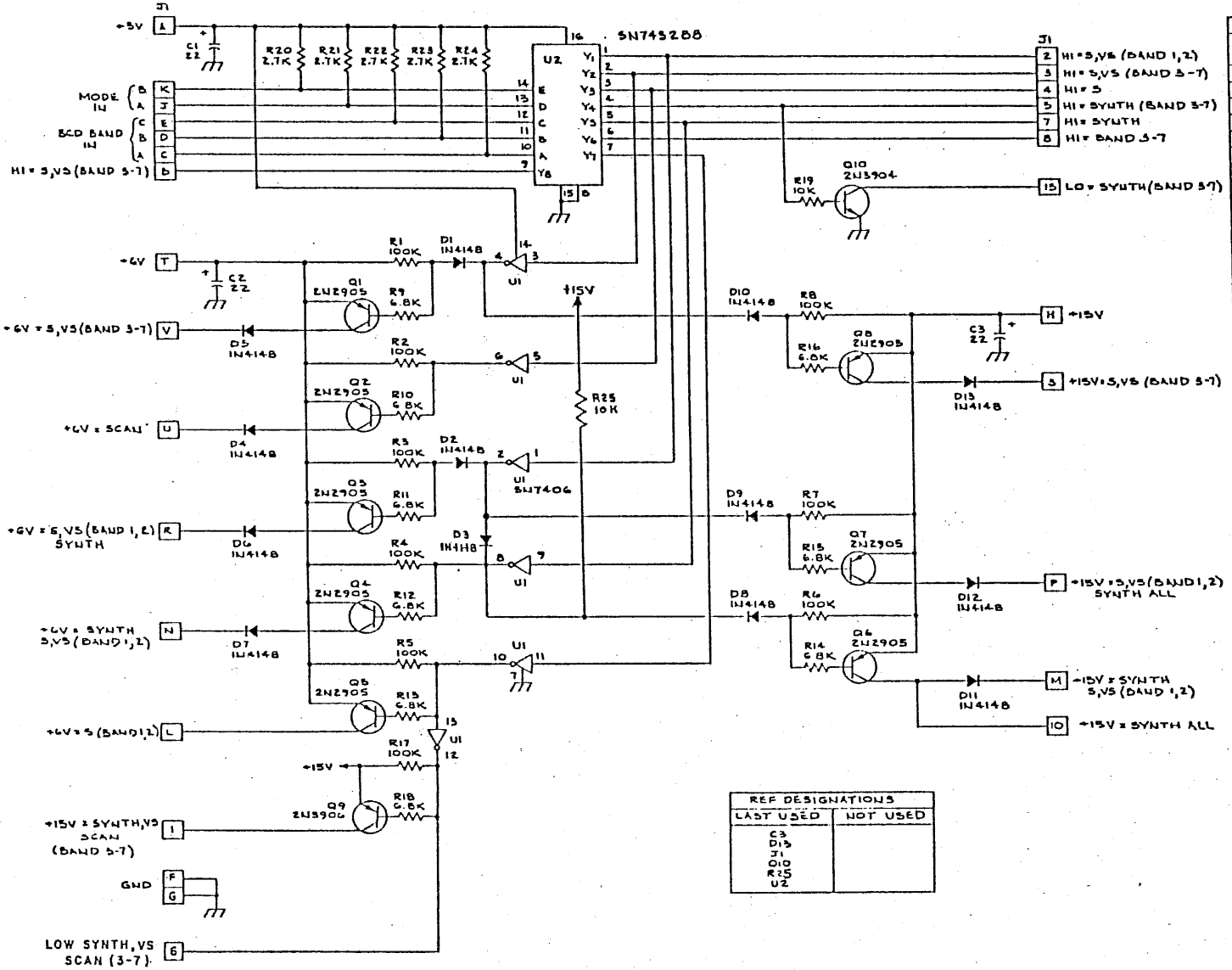

U2 TRUTH TABLE															
BAND	PIN No.						PIN No.								
	14	13	12	11	10		9	7	6	5	4	3	2	1	
1	1	1	0	0	1		0	1	0	0	0	1	0	1	SCAN
2	1	1	0	1	0		0	1	0	0	0	1	0	1	
3	1	1	0	1	1		1	0	1	0	0	1	1	0	
4	1	1	1	0	0		1	0	1	0	0	1	1	0	
5	1	1	1	0	1		1	0	1	0	0	1	1	0	
6	1	1	1	1	0		1	0	1	0	0	1	1	0	
7	1	1	1	1	1		1	0	1	0	0	1	1	0	
1	1	0	0	0	1		0	0	0	0	0	0	0	1	V-SCAN
2	1	0	0	1	0		0	0	0	0	0	0	0	1	
3	1	0	0	1	1		1	0	1	0	0	0	1	0	
4	1	0	1	0	0		1	0	1	0	0	0	1	0	
5	1	0	1	0	1		1	0	1	0	0	0	1	0	
6	1	0	1	1	0		1	0	1	0	0	0	1	0	
7	1	0	1	1	1		1	0	1	0	0	0	1	0	
1	0	1	0	0	1		0	0	0	1	0	0	0	0	SYNTH
2	0	1	0	1	0		0	0	0	1	0	0	0	0	
3	0	1	0	1	1		0	0	1	1	1	0	0	0	
4	0	1	1	0	0		0	0	1	1	1	0	0	0	
5	0	1	1	0	1		0	0	1	1	1	0	0	0	
6	0	1	1	1	0		0	0	1	1	1	0	0	0	
7	0	1	1	1	1		0	0	1	1	1	0	0	0	

KEY:
0 = TTL LOW
1 = TTL HIGH
X = DO NOT CARE

UNLESS OTHERWISE SPECIFIED:
ALL RESISTANCES ARE IN OHMS
ALL RESISTORS ARE 1/4 W
ALL CAPACITORS ARE IN MICROFARADS

REF DESIGNATIONS	
LAST USED	NOT USED
C3 D13 J1 Q10 R25 U2	

PR-700A
A12B3 - SCHEMATIC,
SWITCHING LOGIC

81D123-040

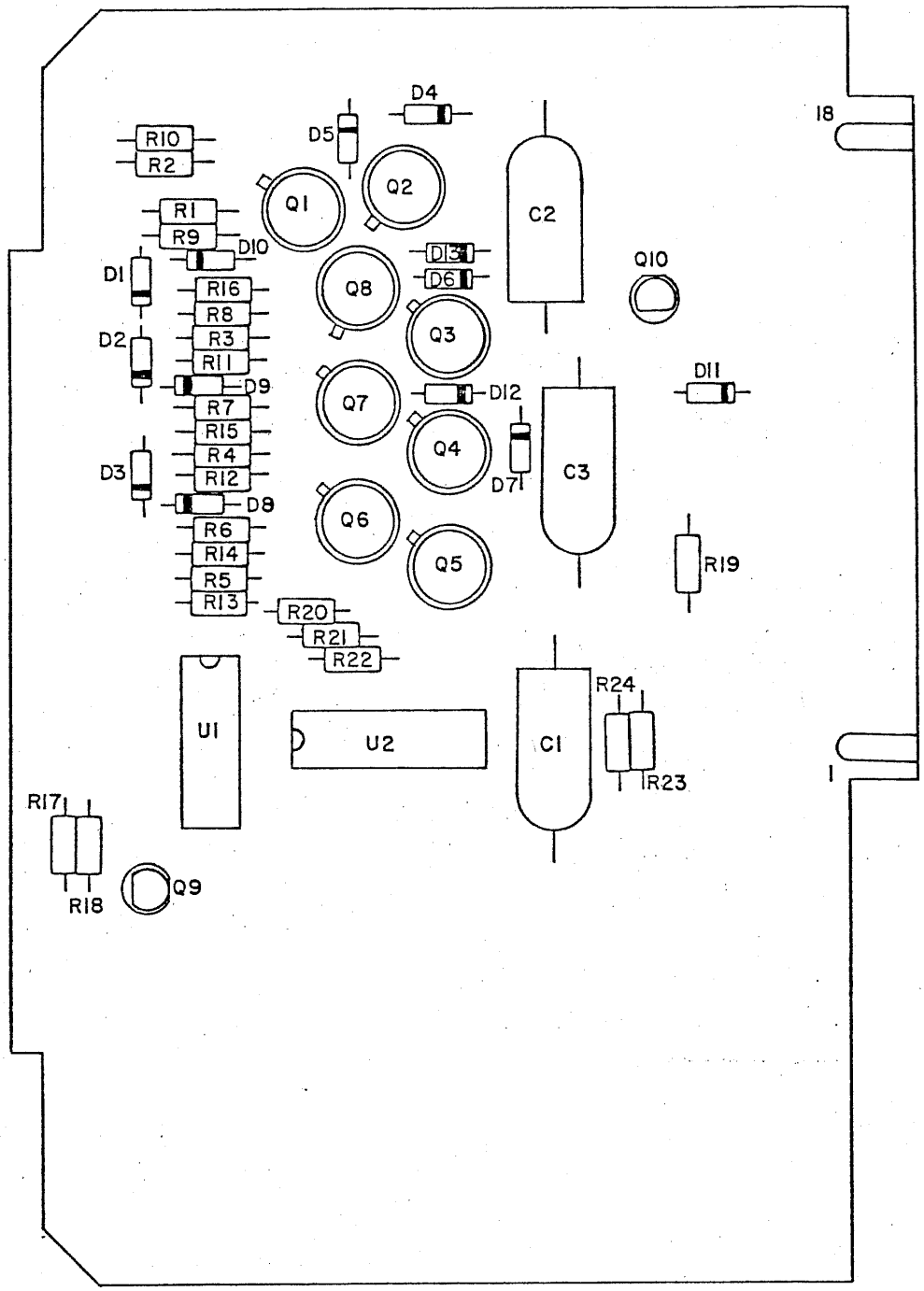

PR-700A
A12B3-COMPONENT LOCATION
SWITCHING LOGIC
81B123-361

EFF. C.O. 92 1/7/80 CCS
287 7/2/81 MW

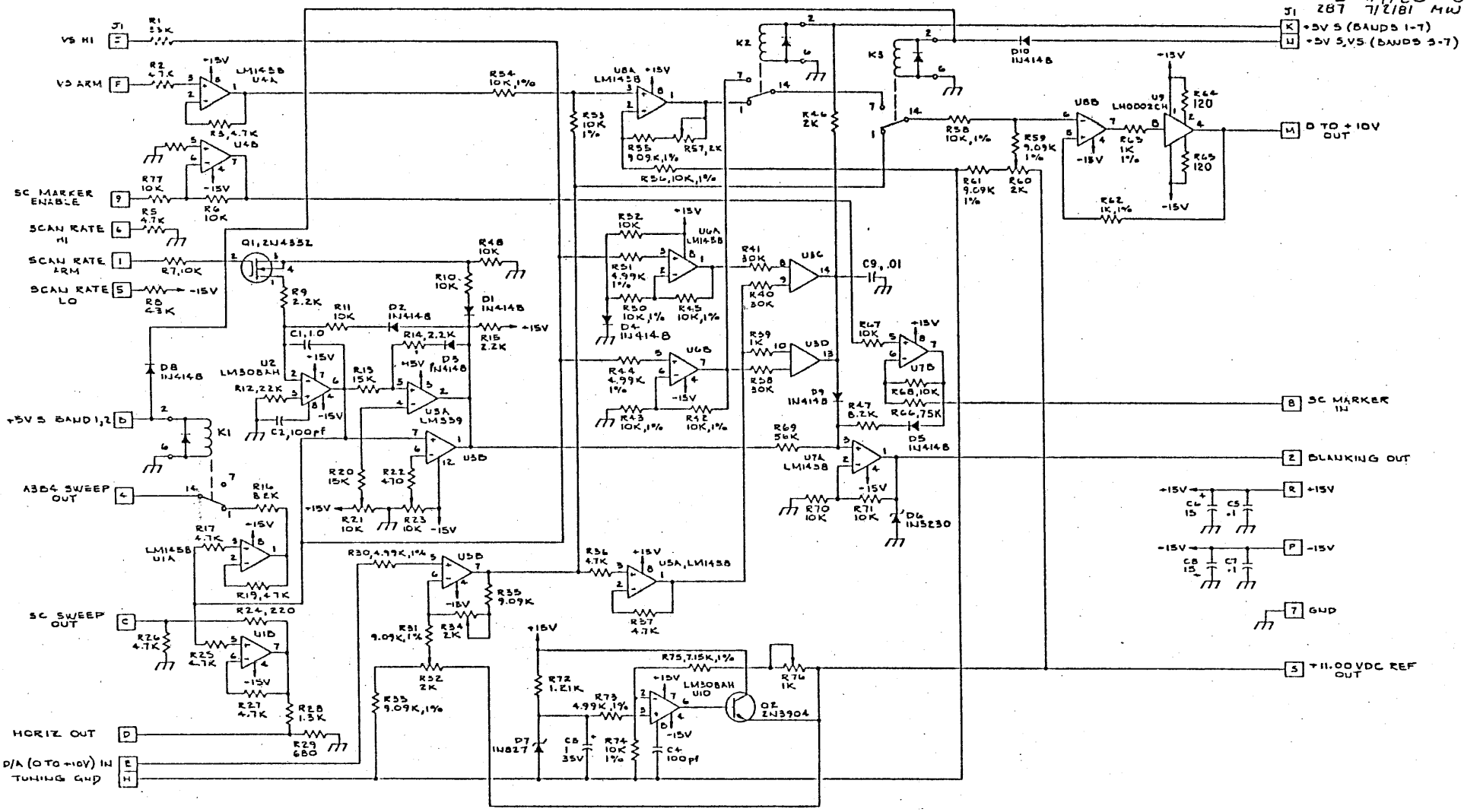

REF DESIGNATIONS	
LAST USED	NOT USED
C8	
D10	
J1	
K3	
Q2	
R77	R18,49
U10	

UNLESS OTHERWISE SPECIFIED:
ALL RESISTANCES ARE IN OHMS
ALL RESISTORS ARE 1/4 W
ALL CAPACITORS ARE IN MICROFARADS
ALL 1% RESISTORS ARE 1/8 W

PR-700A
A12B4 - SCHEMATIC,
SWEEP/MARKER GENERATO

A1D124-041

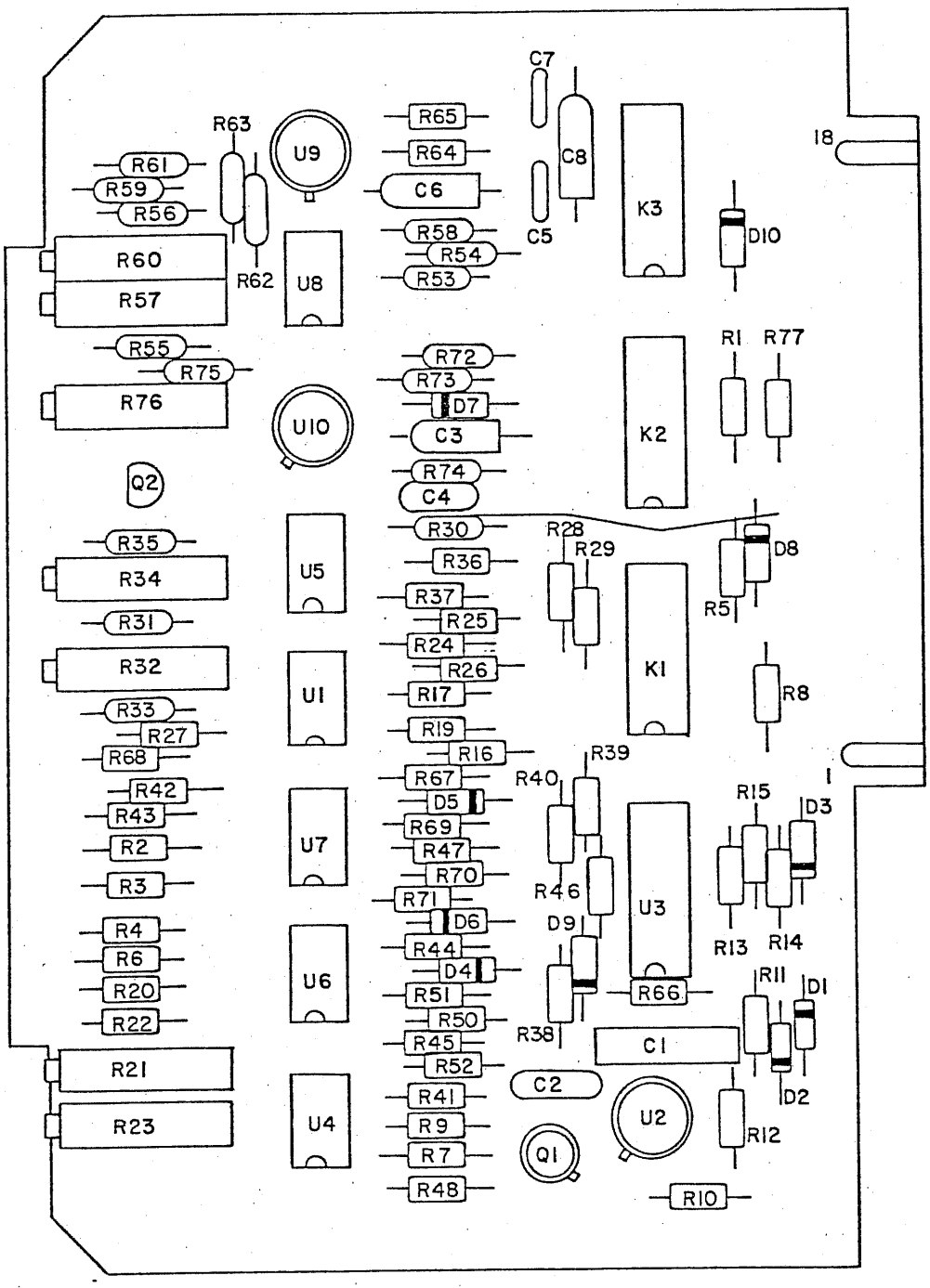

PR-700A
A12B4-COMPONENT LOCATION
SWEEP/MARKER GENERATOR

81B12.4-362

EFF. C.O. # 236 9/17/80 DS
EFF. C.O # 291 2/12/82 JFF

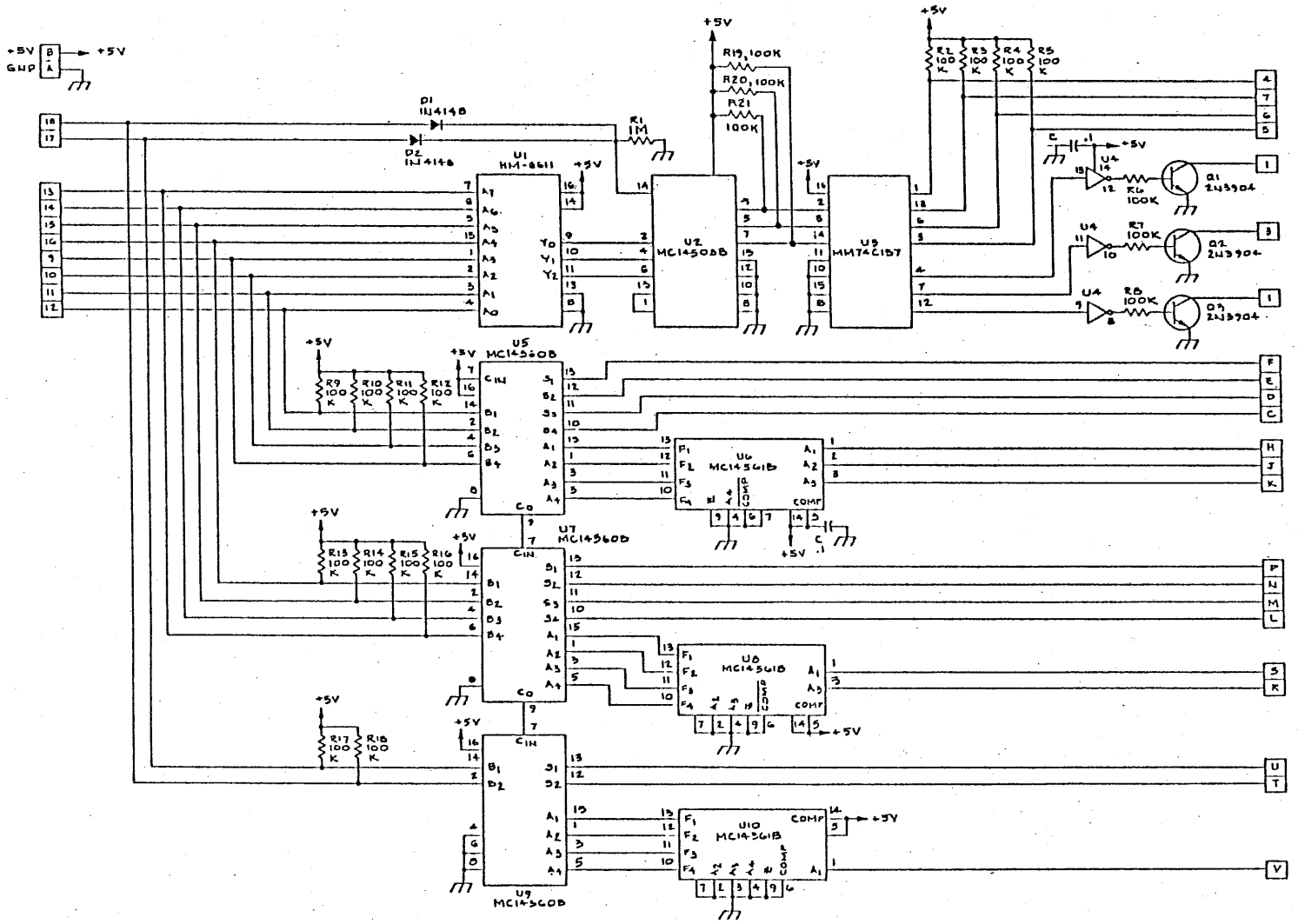

REF DESIGNATIONS	
LAST USED	NOT USED
C2 D2 C3 R21 U10	

UNLESS OTHERWISE SPECIFIED:
ALL RESISTORS ARE 1/8 W
U4, PIN MM74C04, PIN 7 - GND
PINS 1, 3 & 5 - +5V

PR-700B
A1285 - SCHEMATIC,
REMOTE BAND/MODE CONTROL
81D125-1006

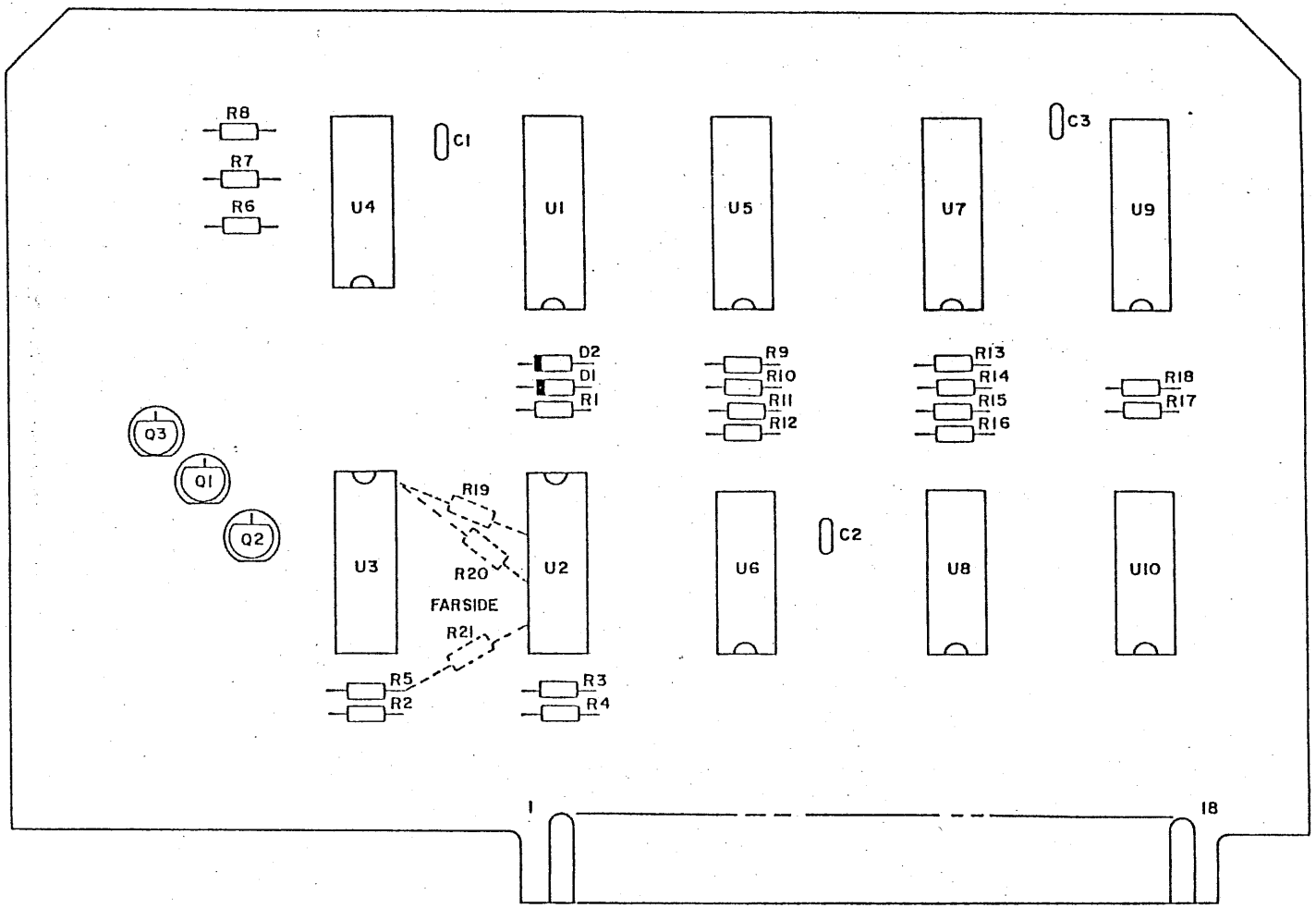

PR-700B
A12B5-COMPONENT LOCATION,
REMOTE BAND/MODE CONTROL
818125-1358

REV C.O. 254 10-17-80 PS
REV C.O. 288 2-3-82 PS

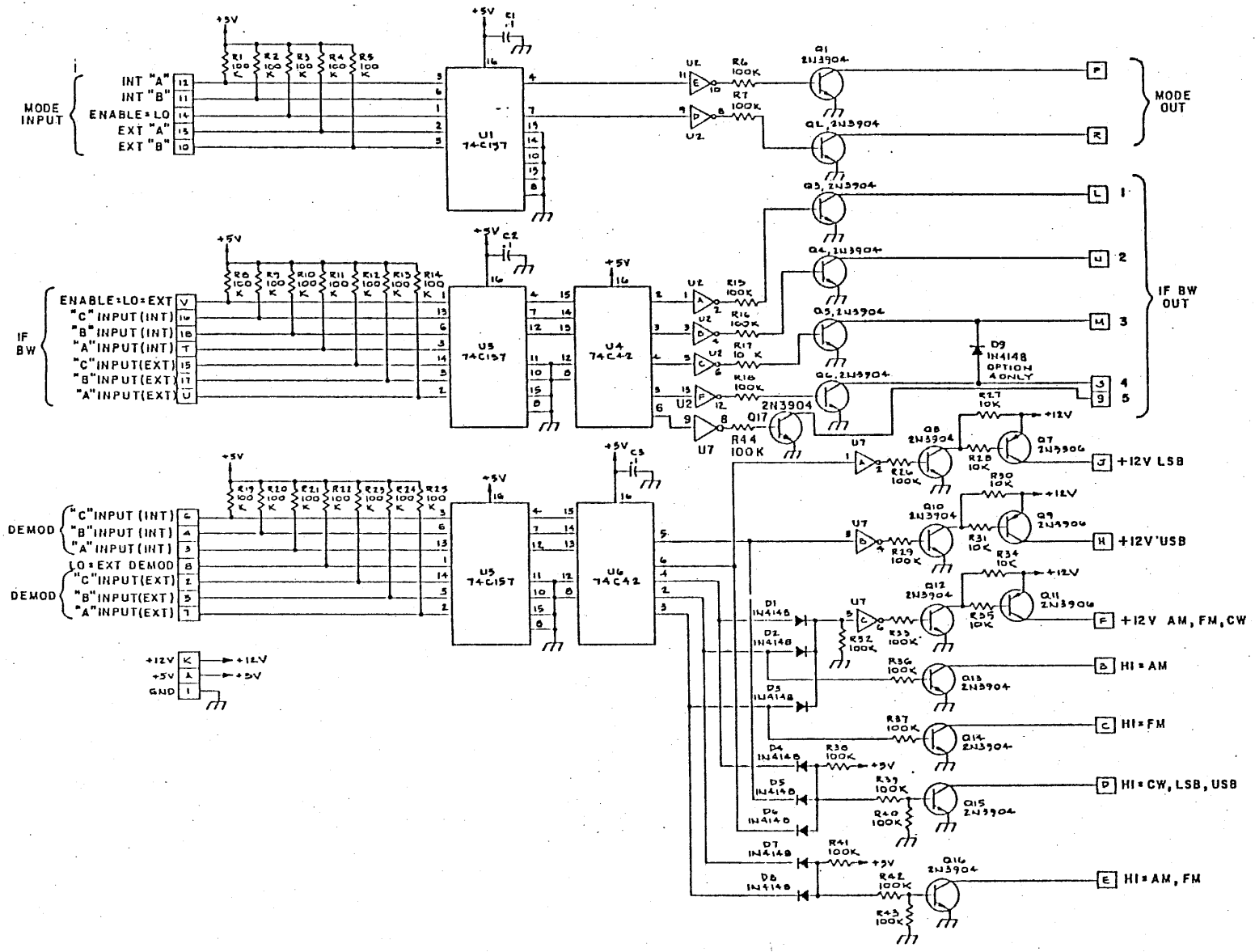

REF DESIGNATIONS	
LAST USED	NOT USED
C5 D9 Q17 R44 U7	

UNLESS OTHERWISE SPECIFIED:
ALL RESISTORS ARE 1/8 W
ALL CAPACITOR VALUES ARE IN MICROFARADS
U2, PN 74S04, PIN 7-GND, PIN 14-+15V
U7, PN 74S04, PIN 7-GND, PINS 9,11,13 & 14-+5V

PR-707C
PR-700B
A12B6 - SCHEMATIC, REMOTE CONTROL
81D126-1007

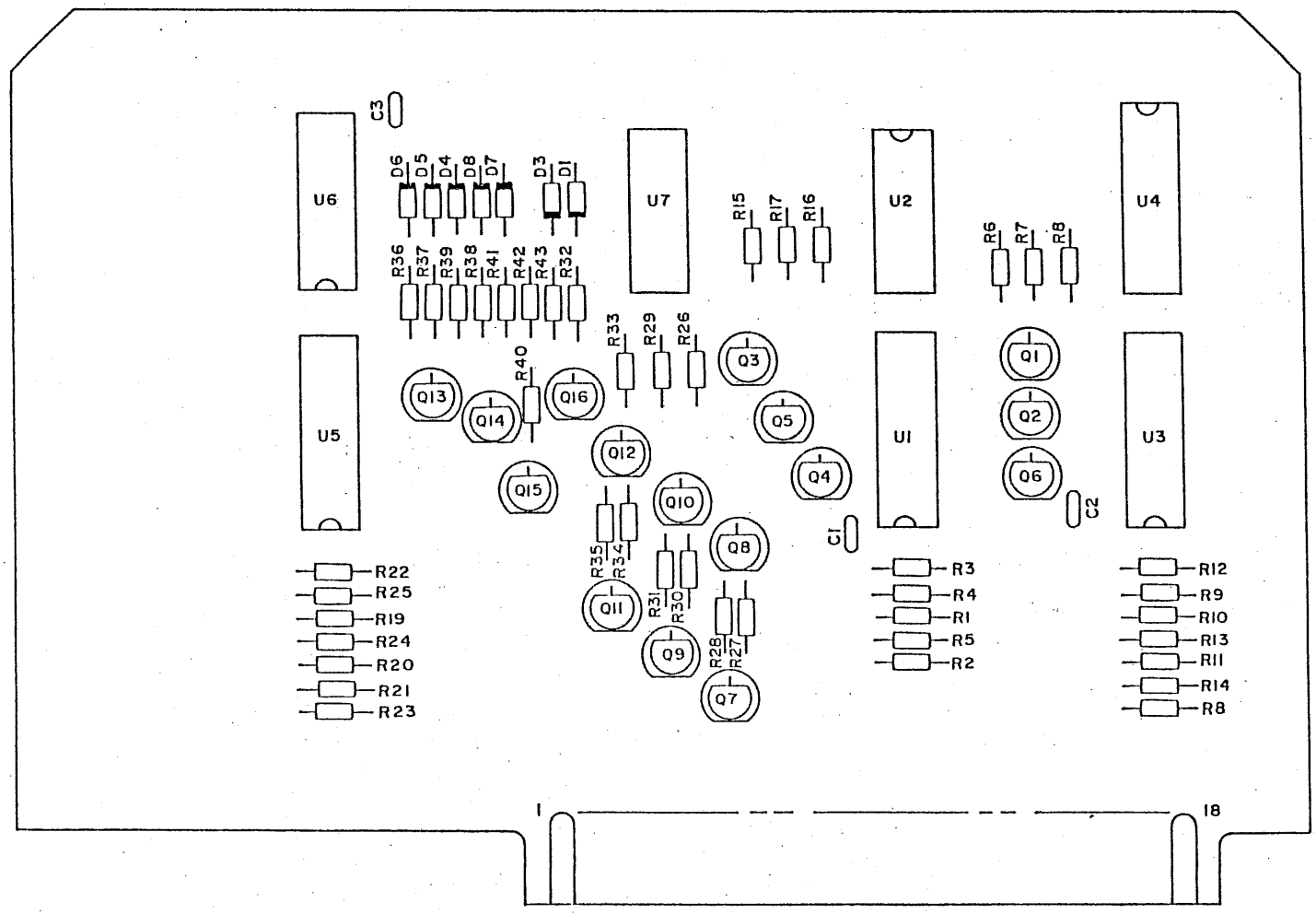

PR-700B
A12B6- COMPONENT LOCATION,
REMOTE CONTROL

819126-1359

C.O. # 308 6.19.81 WK

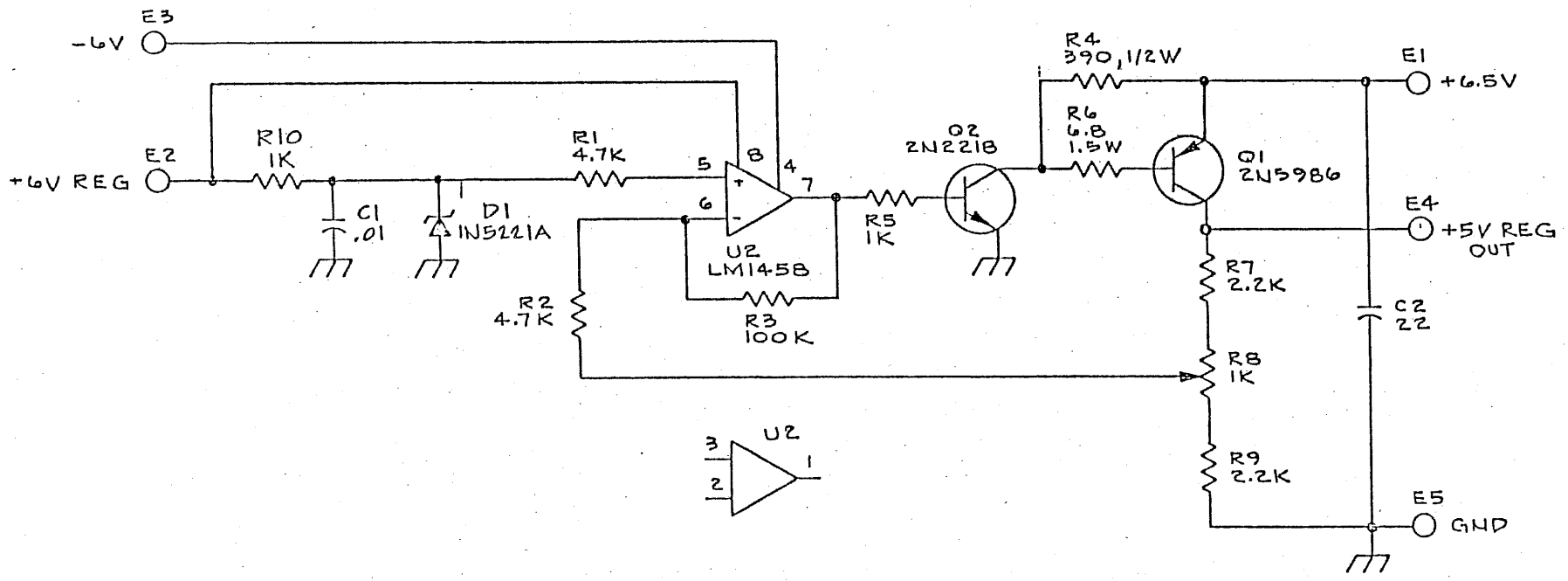

REF DESIGNATIONS	
LAST USED	NOT USED
C2 Q2 R10 U2	U1

UNLESS OTHERWISE SPECIFIED:
ALL RESISTANCES ARE IN OHMS
ALL RESISTORS ARE 1/4W
ALL CAPACITORS ARE IN MICROFARADS

PR-700A
A13 - SCHEMATIC,
+5V REGULATOR BOARD

818130-046

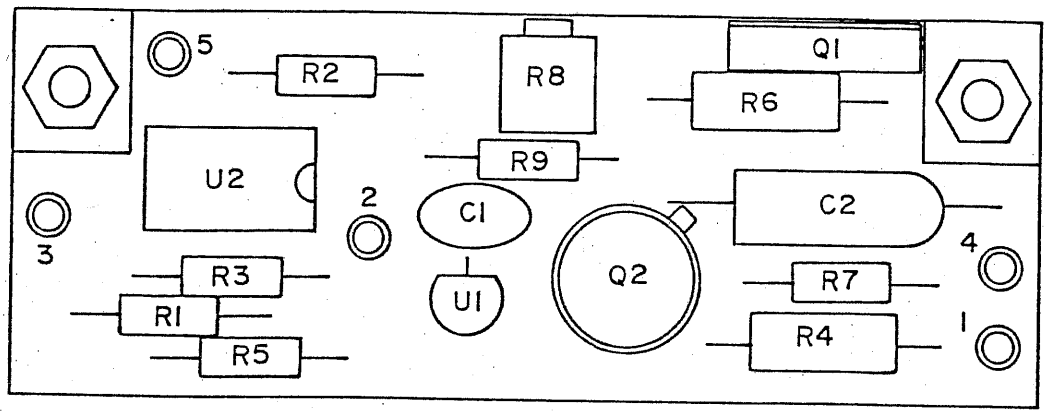

PR-700A
A13-COMPONENT LOCATION,
+5V REGULATOR

81A130-399

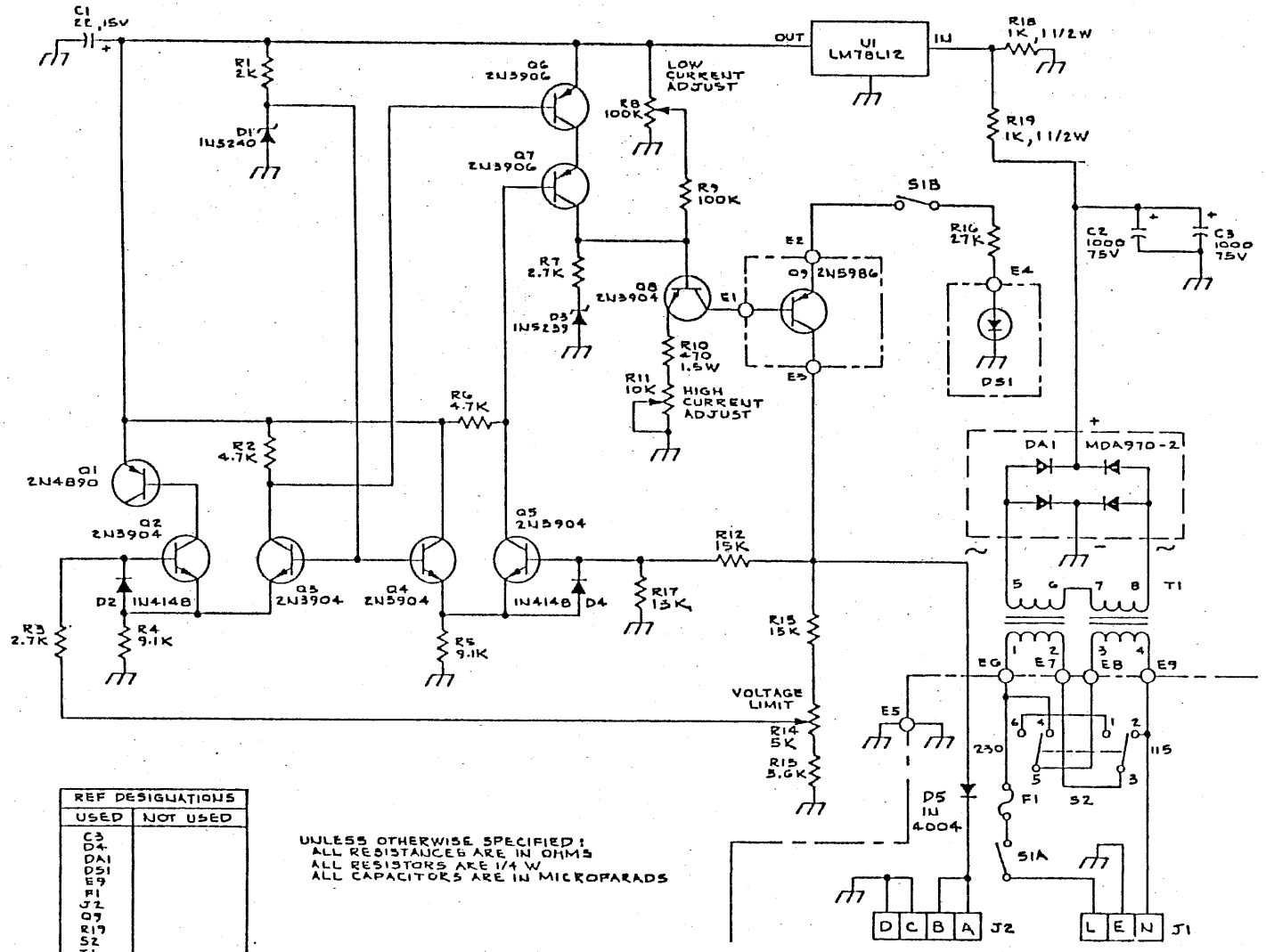

REF DESIGNATIONS	
USED	NOT USED
C3 D4 DA1 DS1 E9 F1 J2 Q9 R19 S2 T1 U1	

UNLESS OTHERWISE SPECIFIED:
ALL RESISTANCES ARE IN OHMS
ALL RESISTORS ARE 1/4 W
ALL CAPACITORS ARE IN MICROFARADS

PR-700A
A14 – SCHEMATIC,
+24V BATTERY CHARGER

81C140-049

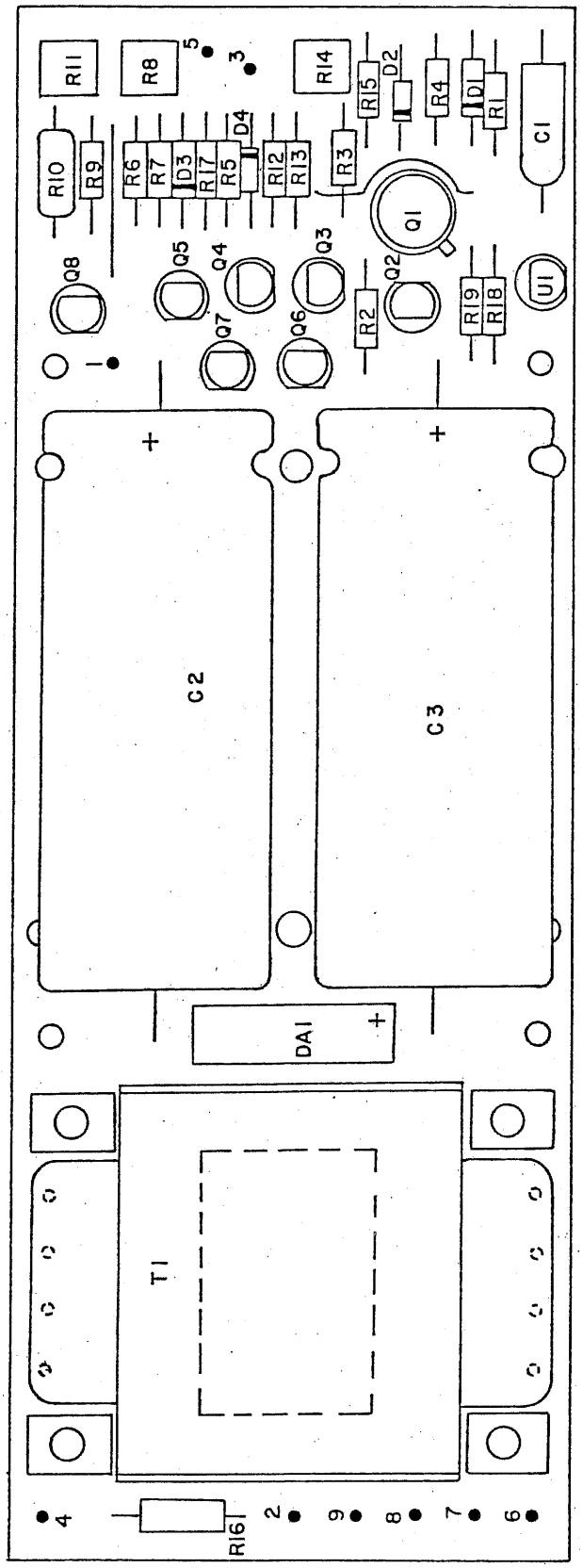

PR700A, PR707
A14B1-COMPONENT LOCATION
+24V BATTERY CHARGER
81B140-326